APPENDIX A

TRAFFIC IMPACT ANALYSIS

Hatch Mott MacDonald
Delivering Solutions

HOMESTEAD AVENUE SUBDIVISION (SYWAK)

TRAFFIC IMPACT ANALYSIS

HOLLISTER, CALIFORNIA

Draft Report

Prepared For

EMC Planning Group
Monterey, CA

February 27, 2015

TABLE OF CONTENTS

1 INTRODUCTION 1
1.1 Scope of Work 1
1.2 Traffic Operation Evaluation Methodologies and Level of Service Standards 2
1.3 Significance Criteria 2
2. EXISTING CONDITIONS 4
2.1 Existing Road Network 4
2.2 Existing Pedestrian Network 4
2.3 Existing Bicycle Network 4
2.4 Existing Transit Network 5
2.5 Existing Conditions Traffic Volumes 5
2.6 Existing Conditions Intersection Operations 5
2.7 Existing Conditions Segment Volumes 6
3 EXISTING PLUS PROJECT CONDITIONS 7
3.1 Project Description 7
3.2 Project Trip Generation 7
3.3 Project Trip Distribution and Assignment 7
3.4 Existing Traffic Diversions 8
3.5 Existing Plus Project Traffic Volumes 8
3.6 Existing Plus Project Conditions Intersection Operations 8
3.7 Existing Plus Project Conditions Segment Volumes 8
4 BACKGROUND CONDITIONS 10
4.1 Background Conditions Traffic Volumes 10
4.2 Background Conditions Intersection Operations 10
4.3 Background Plus Project Conditions Segment Volumes 10
5 BACKGROUND PLUS PROJECT CONDITIONS 11
5.1 Background Plus Project Conditions Traffic Volumes 11
5.2 Background Plus Project Conditions Intersection Operations 11
5.3 Background Plus Project Conditions Segment Volumes 11
6 CUMULATIVE CONDITIONS 12
6.1 Cumulative Conditions Traffic Volumes 12
6.2 Cumulative Conditions Intersection Operations 12
6.3 Cumulative Conditions Segment Volumes 12
7 WARRANT EVALUATIONS 13
7.1 Signalization Warrants 13
7.2 All-Way Stop Warrants 13
8 SAFE ROUTES TO SCHOOL IMPROVEMENTS 16

TABLE OF CONTENTS
(Continued)

9 CONCLUSIONS 17

10 REFERENCES 18

10.1 List of References 18
10.2 List of Contacts 18

LIST OF EXHIBITS

1. Project Location

2. Project Site Plan

3. Existing Transit Routes

4. Existing Conditions – AM and PM Peak Hour Traffic Volumes

5A. Intersection Levels of Service
5B. Segment Volumes
5C. Recommended Intersection Improvements

6. Project Trip Generation

7. Project Trip Assignment – AM and PM Peak Hour Volumes

8. Existing Traffic Diversions – AM and PM Peak Hour Volumes

9. Existing Plus Project Conditions – AM and PM Peak Hour Volumes

10. Background Conditions – AM and PM Peak Hour Volumes

11. Background Plus Project Conditions – AM and PM Peak Hour Volumes

12. Cumulative Conditions – AM and PM Peak Hour Volumes

13. Opportunities and Recommended Improvements near R. O Hardin Elementary

LIST OF APPENDICES

A. Level of Service Description

B. Traffic Counts

C. Intersection Level of Service Calculations – Existing Conditions

D. Intersection Level of Service Calculations – Existing Plus Project Conditions

E. Approved Projects within Hollister

F. Intersection Level of Service Calculations – Background Conditions

G. Intersection Level of Service Calculations – Background Plus Project Conditions

H. Intersection Level of Service Calculations – Cumulative Conditions

I. Warrant Worksheets

1 INTRODUCTION

This traffic study analyzes the potential traffic impacts associated with the proposed development of a residential subdivision located in Hollister, California. The maximum number of homes allowed on this parcel per the current City of Hollister zoning code is 63 homes. The site is located within an existing neighborhood, and is roughly bound by Vali Way, Powell Street, "A" Street, and Homestead Avenue. The project also borders R. O. Hardin Elementary School on Line Street. The proposed project street system would also connect two previously discontinuous streets – Homestead Avenue and Glenmore Drive. **Exhibit 1** depicts the location of the proposed development and study area. **Exhibit 2** shows the proposed project site plan, in relation to the adjacent streets and parcels.

Note that the scope of work included within this report was identified by the City of Hollister.

1.1 Scope of Work

The project would add new trips to the road network. Weekday AM and PM peak hour traffic conditions were analyzed at the following three study intersections:

1. Westside Boulevard / Apricot Lane
2. Homestead Avenue / Apricot Line – "A" Street
3. Powell Street / "A" Street.

Exhibit 1 depicts the location of the study intersections.

Traffic operations for the following development scenarios were analyzed:

- Existing Conditions
- Existing Plus Project Conditions
- Background Conditions
- Background Plus Project Conditions
- Cumulative Conditions

The increase in daily traffic that would be anticipated on the following streets — due to both addition project traffic and the completion of formerly discontinuous streets — is also analyzed:

1. Homestead Avenue, Apricot Lane – "A" Street to Vali Way;
2. Glenmore Drive, Homestead Avenue to Powell Street; and
3. Vali Way, Homestead Avenue to Powell Street.

Exhibit 1 depicts the location of the study segments.

Improvements recommended for existing traffic conditions as well as mitigations for impacts created by the proposed project are recommended where warranted.

1.2 Traffic Operation Evaluation Methodologies and Level of Service Standards

Intersection traffic operations were evaluated based on the level of service (LOS) concept. LOS is a qualitative description of an intersection's operation, ranging from LOS A to LOS F. Level of Service A represents free flow uncongested traffic conditions. Level of service F represents highly congested traffic conditions with unacceptable delay to vehicles at intersections. The intermediate levels of service represent incremental levels of congestion and delay between these two extremes. LOS descriptions for unsignalized intersections are included as **Appendix A**.

At all-way stop-controlled (AWSC) intersections, such as Intersection #1 – Westside Boulevard / Apricot Lane – all approaches of the intersection must stop before entering the intersection. For this reason, delay can vary depending upon the demand on each approach and the direction of travel for each vehicle at the intersection. The overall delay (and corresponding level of service) is therefore the criteria used to evaluate AWSC intersections.

At two-way stop-controlled (TWSC) intersections, such as Intersections #2 and #3 – Homestead Avenue / Apricot Lane – "A" Street and Powell Street / "A" Street, respectively – only the side street approaches must stop before entering the intersection; the major street is allowed to pass freely through the intersection. The side-street delay (and corresponding level of service) is therefore the criteria used to evaluate TWSC intersections, although the overall intersection delay (and corresponding level of service) is also reported to provide overall context to the side-street operations.

The City of Hollister has established a level of service (LOS) of "C" for the accepted minimum standard of operation for intersections. For this study, LOS C was considered the minimum acceptable level of service for overall intersection operations. The Synchro software program (Version 8.0) was utilized to calculate the LOS values for the study intersections, based on technical procedures documented in the *2010 Highway Capacity Manual*.

Both the Caltrans signal and all-way stop warrants were evaluated for the study intersections where appropriate.

1.3 Significance Criteria

All of the study intersections are unsignalized. For unsignalized intersections, the project would create a significant adverse impact on traffic conditions if the following criteria are met:

<u>All-way stop (#1 - Westside / Apricot):</u>

1. The average overall peak hour level of service at the intersection is LOS C or better without the project: The project traffic causes the peak hour level of service to degrade from an acceptable LOS C or better under no project conditions to an unacceptable LOS D or worse under project conditions.

2. The average overall peak hour level of service is already at an unacceptable LOS D or worse without the project: The addition of project traffic causes the average overall delay to increase five (5) or more seconds.

<u>One-or two-way stop (#2 – Homestead / Apricot- "A" and #3 – Powell / A)</u>:

1. The peak hour delay on the worst approach at a one- or two-way stop-controlled intersection is LOS C or better without the project: The peak hour delay on the worst approach at a one- or two-way stop-controlled intersection degrades from an acceptable LOS C or better under no project conditions to an unacceptable LOS D or worse under project conditions <u>and</u> the traffic volumes at the intersection under project conditions are high enough to satisfy the peak-hour volume traffic signal warrant adopted by Caltrans.

2. The peak hour delay on the worst approach at a one- or two-way stop-controlled intersection is already at an unacceptable LOS D or worse without the project: The traffic volumes at the intersection under project conditions are high enough to satisfy the peak-hour volume traffic signal warrant adopted by Caltrans, <u>and</u> the addition of project traffic causes the delay on the worst stop-controlled approach to increase beyond what it was without the project.

2. EXISTING CONDITIONS

This section of the report evaluates existing conditions and includes a description of the project setting.

2.1 Existing Road Network

Regional access to the project area is provided by Highways 25 and 156. Direct access to the project area is provided by Homestead Avenue and Glenmore Drive, and indirect access is provided by Vali Way.

Highway 25 is a major north-south highway through Monterey, San Benito, and Santa Clara Counties. Highway 25 provides primary access between San Benito and Santa Clara Counties via its connection to Highway 101 south of Gilroy. Highway 25 is also a major arterial through the City of Hollister. It also provides primary north-south access through San Benito County south of Hollister as Airline Highway.

Highway 156 is a major east-west highway connecting northern Monterey County and the Central Valley over two distinct segments. The easternmost segment extends from Highway 101 west of San Juan Bautista to Highway 152 north of Hollister, and is a major freight and commuter route.

Westside Boulevard is a two-lane, north-south major collector in western Hollister that extends between Nash Road and Buena Vista Road. North of Buena Vista Road, Westside Boulevard changes designation to Westside Road.

Apricot Lane and "A" Street are two-lane, east-west major collector streets in southwestern Hollister. East of Homestead Avenue, the roadway is designated as Apricot Lane. West of Homestead Avenue, the roadway is designated as "A" Street.

Glenmore Drive, Homestead Avenue, Powell Street, and Vali Way are local residential streets.

2.2 Existing Pedestrian Network

The roadways within the study area and surrounding the project provide continuous sidewalks on both sides of the street. Outside of the study project, there is also a continuous path along sidewalks that can be taken from the project site to nearby R. O. Hardin Elementary School (on Line Street north of Apricot Street).

2.3 Existing Bicycle Network

Within the study area and the area surrounding the project site, bike lanes are only provided along both sides of Westside Boulevard. Bicycle paths are not provided, and no routes are designated as bike routes.

2.4 Existing Transit Network

San Benito County Express, operated and administered by the San Benito County Local Transportation Authority (LTA), operates three fixed-route transit routes – Green Line, Blue Line and Red Line. **Exhibit 3** depicts their routes. The Green and Blue Lines traverse the central, western, eastern, and southern portions of Hollister, with the Green Line traveling in a clockwise direction and the Blue Line traveling in a counter-clockwise direction. The Red Line travels in a primarily north-south orientation, from the southern portions of Hollister, through downtown, to the northern business parks.

LTA also offers two other transit services. It offers two "Intercounty" transit routes – Gilroy Caltrain and Gilroy Gavilan College – which provide limited service between the cities of Hollister (in San Benito County) and Gilroy (in Santa Clara County). LTA also offers a dial-a-ride service that provides point-to-point service within and between Hollister, San Juan Bautista, and Tres Pinos.

Both the Green and Blue Lines stop along Line Street near Apricot Lane, roughly one block away from the southern access to the project site. The Green Line stops at the northbound bus stop, while the Blue Line stops at the southbound bus stop.

2.5 Existing Conditions Traffic Volumes

To ascertain the existing weekday AM and PM peak hour traffic conditions, weekday turning movement counts were collected at the study intersections. Traffic counts at the study intersections were conducted on Thursday, January 22, 2015 from 7:00 to 9:00 a.m. and 4:00 to 6:00 p.m. The existing weekday AM and PM peak hour traffic volumes at the study intersections are shown on **Exhibit 4**. The peak hour traffic volume counts are contained within **Appendix B**.

2.6 Existing Conditions Intersection Operations

Weekday AM and PM peak hour intersection levels of service are summarized in **Exhibit 5A**. Level of service calculation worksheets are included as **Appendix C**.

All of the three study intersections operate at acceptable levels of service under Existing traffic conditions during the weekday AM and PM peak hour, with overall operations of LOS A. Side-street operations at Intersections #2 and #3 operate at an acceptable LOS A or LOS B.

2.7 Existing Conditions Segment Volumes

Exhibit 5B contains the existing volumes on the three study segments. These segments also represent the three proposed access points to the project site. The daily traffic volumes shown on **Exhibit 5B** were estimated based upon the peak hour traffic volumes collected at the study intersections (Homestead Avenue), number of existing homes on the street (Glenmore Drive), and daily traffic volume counts collected using machine tube counters Vali Way. Note that the Vali Way volumes are an average of the Tuesday, January 20 – Thursday, 22, 2015 daily traffic volumes from within the total count period (i.e. January 15th through January 25th). The Vali Way machine tube counts are also contained within **Appendix B**.

3 EXISTING PLUS PROJECT CONDITIONS

This section of the report describes the analyses of the study road network under Existing Plus Project traffic conditions. The section includes the analysis of project trip generation, distribution and assignment.

3.1 Project Description

The proposed project involves the development of a residential subdivision in the City of Hollister. Per the current city zoning, a maximum of 63 homes are allowed on this parcel, although the current site plan includes only 41 individual parcels. To be conservative, this report documents traffic operations and impacts for the maximum 63 homes.

Development of the project would complete two street segments – Homestead Avenue and Glenmore Drive – that would provide new access and circulation opportunities for existing development in the vicinity of the project.

3.2 Project Trip Generation

The estimated trip generation for the project is shown on **Exhibit 6**. Based upon trip generation rates published by the Institute of Transportation Engineers in *Trip Generation Manual*, 9th Edition, 2012, the project is estimated to generate 600 trips per day, with 47 trips generated during the AM peak hour (12 in, 35 out) and 63 trips generated during the PM peak hour (40 in, 23 out).

3.3 Project Trip Distribution and Assignment

The project trip distribution was estimated based upon existing traffic patterns and the locations of complementary land uses. The project trip distribution is summarized in the following table:

To / From	Percentage
North via Westside Boulevard	35%
North via Powell Street	20%
South via Westside Boulevard	20%
South via Powell Street	15%
South via Homestead Avenue	5%
East via “A” Street	5%
Total	**100%**

The project AM and PM peak hour trips were assigned to the local road network based on the preceding trip distribution percentages. The project AM and PM peak hour trip assignment is shown on **Exhibit 7**.

3.4 Existing Traffic Diversions

The roadway infrastructure developed by the project will complete currently discontinuous streets – Homestead Avenue and Glenmore Drive. This will provide existing traffic with alternative travel routes and traffic diversions are anticipated.

Potential traffic diversions were estimated based upon the Existing AM and PM peak hour traffic volumes shown on **Exhibit 3**. The estimated traffic diversion during the AM and PM peak hour upon completion of the project road network is shown on **Exhibit 8**.

3.5 Existing Plus Project Traffic Volumes

Trips generated by the project were combined with existing traffic volumes and the traffic diversions to obtain Existing Plus Project traffic volumes, which are shown on **Exhibit 9**.

3.6 Existing Plus Project Conditions Intersection Operations

Weekday AM and PM peak hour intersection levels of service are summarized on **Exhibit 5A**. Level of service calculation worksheets are included in **Appendix D**.

All of the study intersections are projected to continue to operate at acceptable levels of service under Existing Plus Project conditions. All intersections would continue to operate at LOS A overall, and side-street operations for Intersections #2 and #3 would be at an acceptable LOS B.

According to City of Hollister LOS standards the study intersections will operate acceptably under Existing Plus Project and no improvements are recommended from a level of service standpoint.

3.7 Existing Plus Project Conditions Segment Volumes

As previously identified, new street connections and extensions are proposed to occur with construction of the project – specifically Homestead Avenue and Glenmore Drive. **Exhibit 5B** shows the daily traffic volumes at these locations, plus Vali Way. Collectively, these represent the three proposed access points into and out of the project. The traffic volume at the locations would consist of existing trips, project generated trips and any anticipated existing traffic that was diverted from other travel routes.

The largest net increase in daily traffic volume is forecast on Homestead Avenue at the southern entrance to the project, where a daily traffic volume of 980 vehicles is forecast after completion of the project – this is nearly a doubling of traffic over existing conditions. By comparison, the existing daily traffic volume on Vali Way would increase to a more modest 420 vehicles per day, and Glenmore Drive would increase to about 110 vehicles per day. Operational problems are not anticipated on any of these streets, as residential streets are considered to operate at LOS A when carrying up to 1,200 vehicles per day. No significant operational problems are anticipated to occur on the local residential streets because of the development of the proposed project.

Small traffic diversions of existing traffic through the neighborhood are anticipated to occur onto Homestead Avenue and Vali Way with completion of the project. However, these diversions are anticipated to be rather small – about 40 vehicles per day – and are already accounted for in the volumes and analysis shown on **Exhibits 4, 5A,** and **5B**. No through traffic diversions of existing traffic are anticipated on Glenmore Drive.

Approximate 30 vehicles per day along Vali Way are also estimated to use the new Homestead Avenue project access to exit their own neighborhood. This potential traffic diversion is also already accounted for in the volumes and analysis shown on **Exhibits 4, 5A,** and **5B**.

The northerly extension of Homestead Avenue north of Apricot Lane – "A" Street (i.e. the southerly access to the project site) will create a more awkward connection with the "out" driveway from the nearby early childhood education center. Currently, this driveway shares access to this short leg of Homestead Avenue with a residential duplex, with both units of the duplex having a shared driveway onto Homestead Avenue between the education center "out" driveway and Apricot Lane – "A "Street. It is recommended that the education center "out" driveway onto Homestead Avenue be realigned as much as possible to meet the new Homestead Avenue extension at an angle closer to 90 degrees, while still preserving full access (where possible) for the duplex driveway. The final design should be verified using vehicle turning templates at both driveways and approved by the City of Hollister. This design should be included within the tentative map for the study project, as a component of the proposed Homestead Avenue extension into the project site.

4 BACKGROUND CONDITIONS

This section of the report describes the analyses of the study road network under background traffic conditions. Background conditions models traffic conditions with traffic from approved but not yet constructed developments added to the study intersections.

4.1 Background Conditions Traffic Volumes

A listing of approved but not yet constructed or occupied projects within San Benito County and the City of Hollister are included in **Appendix E**. The list of approved projects was referenced from *Gonzales Property Residential Transportation Impact Analysis*, Hexagon Transportation Consultants, October 30, 2014.

Weekday AM and PM peak hour traffic generated by approved projects were estimated and assigned to the local road network and combined with existing peak hour traffic volumes to obtain background condition AM and PM peak hour traffic volumes, which are shown on **Exhibit 10**. The analysis of Background Conditions assumes full development of the approved projects.

4.2 Background Conditions Intersection Operations

Intersection levels of service for the Background Condition are summarized on **Exhibit 5A**. Level of service calculation worksheets are included in **Appendix F**.

All study intersections would continue to operate during the at LOS A overall under Background Conditions during the AM and PM peak hours, which would better than the LOS C standard for the City of Hollister. Side-street operations at Intersections #2 and #3 would operate at LOS B, also within City of Hollister standards.

4.3 Background Plus Project Conditions Segment Volumes

Exhibit 5B summarizes the volumes on the study segments under Background conditions. No traffic from approved projects is anticipated to travel along the study segments; therefore, traffic volumes under Background conditions would remain the same as under Existing conditions.

5 BACKGROUND PLUS PROJECT CONDITIONS

This section of the report describes the analysis of the study road network under Background Plus Project traffic conditions. Background Plus Project conditions includes traffic from approved but not yet constructed developments and project traffic added to the existing traffic volumes at the study intersections.

5.1 Background Plus Project Conditions Traffic Volumes

The aforementioned project trip assignment and the traffic diversions associated with the completed street network were combined with the Background peak hour volumes to obtain Background Plus Project Buildout conditions traffic volumes, which are shown in **Exhibits 11**.

5.2 Background Plus Project Conditions Intersection Operations

Intersection levels of service for the Background Plus Project Conditions are summarized on **Exhibit 5A**. LOS calculation worksheets are included in **Appendix G**.

All study intersections are projected to continue to operate at an overall LOS A during the AM and PM peak hours under Background Plus Project traffic conditions. Side-street operations at Intersections #2 and #3 would also continue to operate at LOS B, which is also within City of Hollister standards.

Based upon the analysis of Background and Background Plus Project Conditions, the project would not significantly impact the study intersections.

5.3 Background Plus Project Conditions Segment Volumes

Exhibit 5B summarizes the volumes on the study segments under Background Plus Project conditions. No traffic from approved projects is anticipated to travel through the project site; therefore, traffic volumes under Background Plus Project conditions would remain the same as under Existing Plus Project conditions.

6 CUMULATIVE CONDITIONS

This section of the report describes the analyses of the study road network under Cumulative 2035 traffic conditions. The cumulative conditions analysis is based on the 2035 traffic volume forecasts from the San Benito County General Plan Draft PEIR. Also included are the project trip distribution and anticipated traffic diversions previously discussed in Chapter 3.

6.1 Cumulative Conditions Traffic Volumes

Future growth at buildout of the San Benito County General Plan was quantified at the study intersections, which roughly represents traffic conditions in the Year 2035. This was based upon intersection forecasts included within the San Benito County General Plan Draft PEIR, as well as anticipated developments along the Westside Boulevard corridor. Note that for some of the study intersections, as well as all of the study segments, little traffic growth is anticipated beyond the Background Plus Project traffic volumes at buildout of the County General Plan, primarily due to few vacant parcels in the immediate neighborhood (other than the study project). Cumulative conditions traffic volumes without the proposed project are shown on **Exhibit 12**.

6.2 Cumulative Conditions Intersection Operations

Intersection levels of service under Cumulative conditions are summarized in **Exhibit 5A**. LOS calculation worksheets are included in **Appendix H**.

The Westside / Apricot intersection would operate at LOS B during the AM and PM peak hours, while the remaining study intersections would remain at the same overall and side-street levels of service as under Background Plus Project conditions (namely overall LOS A and side-street LOS B for both the AM and PM peak hours).

Based upon the analysis of Cumulative Conditions, the project would not significantly impact the study intersections.

6.3 Cumulative Conditions Segment Volumes

Exhibit 5B summarizes the volumes on the study segments under Cumulative conditions. Volumes along the study segments are not anticipated to change under Cumulative conditions, primarily due to few vacant parcels in the immediate neighborhood (other than the study project); therefore, traffic volumes under Cumulative conditions would remain the same as under Background Plus Project conditions.

7 WARRANT EVALUATIONS

An evaluation was performed as to if any of the study intersections warrant a change in their current traffic control. The Westside / Apricot intersection was evaluated for signalization, while the Homestead / Apricot – "A" and Powell / "A" intersections were evaluated for all-way stop control. The warrants for each traffic control type were taken from the California Manual on Uniform Traffic Control Devices (CA MUTCD). **Appendix I** contains the warrant worksheets.

7.1 Signalization Warrants

At the Westside / Apricot intersection, both the four hour volume warrant (Existing Conditions only) and peak hour volume warrant (all analysis scenarios) were evaluated. Neither warrant was met under any analysis scenario; therefore, signalization is not considered warranted at the Westside / Apricot intersection and the existing intersection traffic control should remain (i.e. all-way stop control).

7.2 All-Way Stop Warrants

For the Homestead / Apricot – "A" and Powell / "A" intersections, all-way stop warrants were evaluated. The primary all-way stop warrant has two parts. The volume portion of the warrant requires that volumes on the major (i.e. not stopped) and minor (i.e. stopped) approaches of an intersection meet a certain minimum vehicle threshold for eight hours of a day. As this warrant was evaluated during just the Existing Plus Project, Background Plus Project and Cumulative conditions, projections for just the peak hours were evaluated. At both intersections, volumes on both approaches of each intersection did not meet the minimum threshold during either peak hour. As the peak hour volumes did not meet the minimum thresholds for conversion to all-way stop control, it is unlikely that these thresholds will be met during other times of day. Therefore, the volume portion of the all-way stop control warrant is not met for either intersection.

The second portion of the primary all-way stop warrant is based upon minor street (or side-street) delay. This delay must meet at least at least 30 seconds of average delay during the hour with the highest delay. At the Homestead / Apricot – "A" and Powell / "A" intersections, side-street delay during the peak hours only ranges from 9.9 seconds to 12.1 seconds – well below the 30-second threshold. Therefore, neither intersection meets the delay portion of the all-way stop warrant.

Additional qualitative warrants exist for all-way stop control. These include:

1) Vehicle / Pedestrian Conflict
2) Left Turn Conflict
3) Sight Distance
4) Similar Streets

Below is a discussion of each qualitative warrant.

Vehicle / Pedestrian Conflict:
Pedestrian volumes at the Homestead / Apricot – "A" and Powell / "A" intersections are rather low, and are not constant throughout the peak hours. Therefore, few vehicle/pedestrian conflicts exist at this intersection. Thus, the vehicle/pedestrian conflict warrant is not met.

Left Turn Conflict:
As overall and side-street delays at both the Homestead / Apricot – "A" and Powell / "A" intersections are rather low (i.e. LOS A and LOS B), left turns at these intersections are not hindered, and thus do not pose a problem at either intersection. Thus the left turn conflict warrant is not met.

Sight Distance:
At the Homestead / Apricot – "A" intersection, sight distance (i.e. the ability to see intersection traffic before entering the intersection) is not restricted by intersection configuration, street furniture, or landscaping. Therefore, the sight distance warrant is not met at that intersection.

However, at the Powell / "A" intersection, sight distance is restricted somewhat on the eastbound "A" Street approach. Measuring from approximately 5 feet back from the stop bar, sight distance in the eastbound direction ("A" Street) is only 70 feet towards the north (Powel Street) and 185 feet towards the south (Powell Street). Normally, the Caltrans corner sight distance standard at an intersection with a roadway of 25 mph like Powell Street is 275 feet, but the minimum Caltrans stopping sight distance standard for 25 mph is 150 feet.

The sight distance is restricted by landscaping (i.e. trees and bushes) on private property at the northwest and southwest corners of the intersection. If drivers pull forward so that the driver ("A" Street) is over the stop bar (and the front of the vehicle is encroaching into the on-street parking aisle along the southbound side of Powell Street – a typical vehicle stopping point, based upon field observations), the sight distance is greatly improved – 165 feet towards the north and 330 feet (i.e. the entire block) towards the south. However, when this sight distance was measured (February 2015), on-street parking was relatively light. To achieve this level of sight distance, on-street parking would need to be prohibited along the southbound side of Powell Street for approximately 100 feet north of the intersection and 25 feet south of the intersection. If that amount of parking restriction cannot be achieved, then all-way stop control is recommended at this intersection.

Also note that vehicle speeds on Powell Street may exceed the posted speed limit of 25 mph. Although vehicle speeds were not measured during the February 2015 field visit, there were vehicles along Powell Street that did appear to be traveling above 25 mph. The higher vehicle speeds would require a longer sight distance – for example, for 30 mph, the Caltrans recommendation for corner sight distance is 330 feet and the minimum stopping sight distance is 200 feet. This may require extending the parking prohibition north of "A" Street, which may be harder to achieve.

Whichever option is pursued (i.e. the elimination of on-street parking or the conversion of the Powell / "A" intersection to all-way stop control), it is recommended that it be implemented prior to approval of the first building permit on the project site. The City of Hollister shall determine, and the project applicant shall agree upon, the project's proportion of the intersection improvements needed to mitigate the project share of the impact. Note that neither the parking restriction nor the all-way stop conversion is included within the City of Hollister Capital Improvement Projects program for Fiscal Year 2014/2015.

Similar Streets:
If the two streets that cross at an intersection are of similar width and function, conversion to all-way stop control may be warranted.

Apricot Lane and "A" Street are designated in the City of Hollister General Plan as major collector streets, although they both have relatively low volumes. Neither Homestead Avenue nor Powell Street share that designation. However, street widths are relatively similar between all of these streets (i.e. about 40 feet). While the driver perception of hierarchy would place Powell Street above "A" Street at their intersection, Apricot Lane - "A" Street and Homestead Avenue appear to have a similar stature. Therefore, the Powell / "A" intersection would not meet the Similar Streets warrant, but the Homestead / Apricot – "A" intersection would meet the Similar Streets warrant.

The conversion of the Homestead / Apricot – "A" intersection to all-way stop control is recommended to be implemented prior to approval of the first building permit on the project site. The City of Hollister shall determine, and the project applicant shall agree upon, the project's proportion of the intersection improvements needed to mitigate the project share of the impact. Note that the all-way stop conversion is not included within the City of Hollister Capital Improvement Projects program for Fiscal Year 2014/2015.

The recommended improvements at each study intersection are repeated in **Exhibit 5C**.

Operations with All-Way Stop Control:

Exhibit 5A depicts the operations of the Homestead / Apricot – "A" and Powell / "A" intersections with implementation of the all-way stop control at each intersection. With the improvement, operations would remain within acceptable standards (LOS A for both intersections for all study scenarios).

8 SAFE ROUTES TO SCHOOL IMPROVEMENTS

In February 2014, a Safe Routes to School needs assessment was prepared for nearby R. O. Hardin Elementary School on Line Street. (The project site borders this school to the west.) **Exhibit 13** identifies the opportunities and recommended improvements identified in this report for R. O. Hardin Elementary.

Of the issues identified, only one would be directly affected by students traversing to school – the access from the school to Homestead Avenue. This access would minimize the distance needed for a student to walk to the school, as well as potentially reduce the number of students that would be driven to the school. However, the current site plan does not propose such a connection, nor does it provide the necessary space for such a connection to be made. It is also uncertain if the Hollister School District is interested in establishing such a connection. It is therefore recommended that, if the Hollister School District is amenable to its construction, the project add a new pedestrian connection between Homestead Avenue and R. O Hardin Elementary School. The design of such a connection shall be reviewed by both the Hollister School District and the City of Hollister to ensure that its design meets established standards for a multi-use pathway, including safety issues. The project would be responsible for this improvement.

9 CONCLUSIONS

This traffic impact analysis evaluated the potential impacts from the traffic that would be generated by the proposed Homestead Avenue (Sywak) project on the surrounding road network.

Development of the project would not create significant traffic impacts to the intersections that were studied, based upon levels of service. In addition, no significant operational problems are anticipated to occur on the local residential streets because of the development of the proposed project.

It is recommended that the education center "out" driveway onto Homestead Avenue be realigned as much as possible to meet the new Homestead Avenue extension at an angle closer to 90 degrees, while still preserving full access (where possible) for the duplex driveway. The final design should be verified using vehicle turning templates at both driveways and approved by the City of Hollister. This design should be included within the tentative map for the study project, as a component of the proposed Homestead Avenue extension into the project site.

Signalization of the Westside Boulevard / Apricot Lane intersection is not warranted nor is it recommended.

While conversion of the Homestead Avenue / Apricot Lane – "A" Street and Powell Street / "A" Street intersections to all-way stop control is not warranted based upon volumes and delay, it may be warranted based upon other criteria. Conversion to all-way stop control is warranted at the Powell Street / "A" Street intersection to improve sight distance if prohibition of on-street parking (southbound direction) is not implemented. Conversion to all-way stop control is warranted at the Homestead Avenue / Apricot Lane – "A" Street intersection due to the similar widths and functions of the two cross streets. Implementation of the recommended improvements at each intersection are to occur prior to approval of the first building permit on the project site. The City of Hollister shall determine, and the project applicant shall agree upon, the project's proportion of the intersection improvements needed to mitigate the project share of the impact.

It is recommended that, if the Hollister School District is amenable to its construction, the project add a new pedestrian connection between Homestead Avenue and R. O. Hardin Elementary School. The design of such a connection shall be reviewed by both the Hollister School District and the City of Hollister to ensure that its design meets established standards for a multi-use pathway, including safety issues.

10 REFERENCES

10.1 List of References

1. *Gonzales Property Residential Transportation Impact Analysis*, Hexagon Transportation Consultants, October 30, 2014.
2. *City of Hollister General Plan*, Moore Iacofano Goltsman, December 2005.
3. *San Benito County General Plan Draft PEIR*, San Benito County, February 2013.
4. *California Manual on Uniform Traffic Control Devices*, California Department of Transportation (Caltrans), 2012.
5. *Highway Design Manual*, California Department of Transportation (Caltrans), March 7, 2014.
6. *City of Hollister Capital Improvement Projects Program – Fiscal Year 2014/2015,* City of Hollister, November 3, 2014.
7. *Safe Routes to School Need Assessment and Preliminary Recommendations – Calaveras Elementary & R. O. Hardin Elementary*, Alta Planning and Design, February 2014.

10.2 List of Contacts

1. Polaris Kinison Brown, EMC Planning Group, Monterey, California.

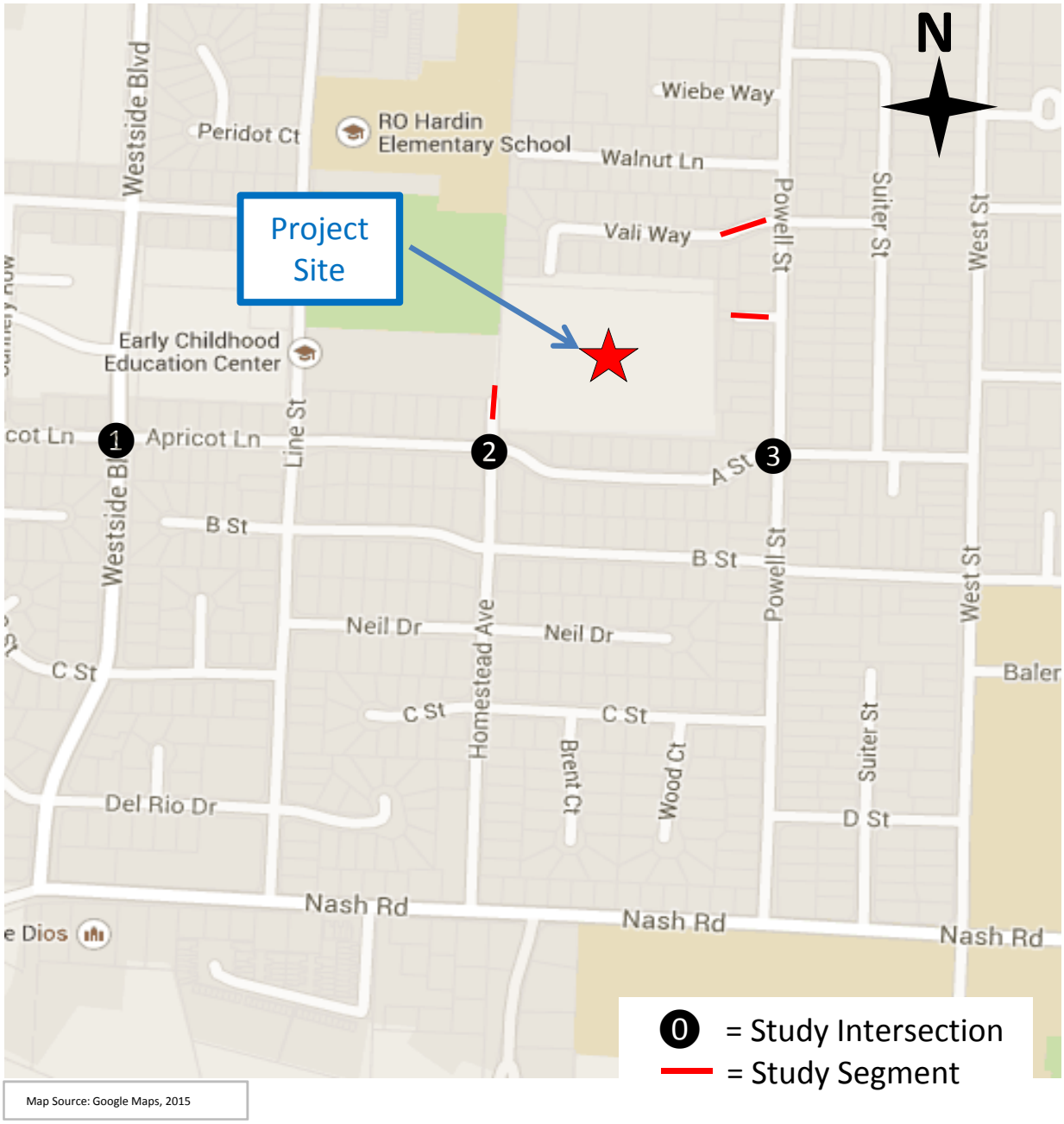

Map Source: Google Maps, 2015

EXHIBIT 1
Project Location Map

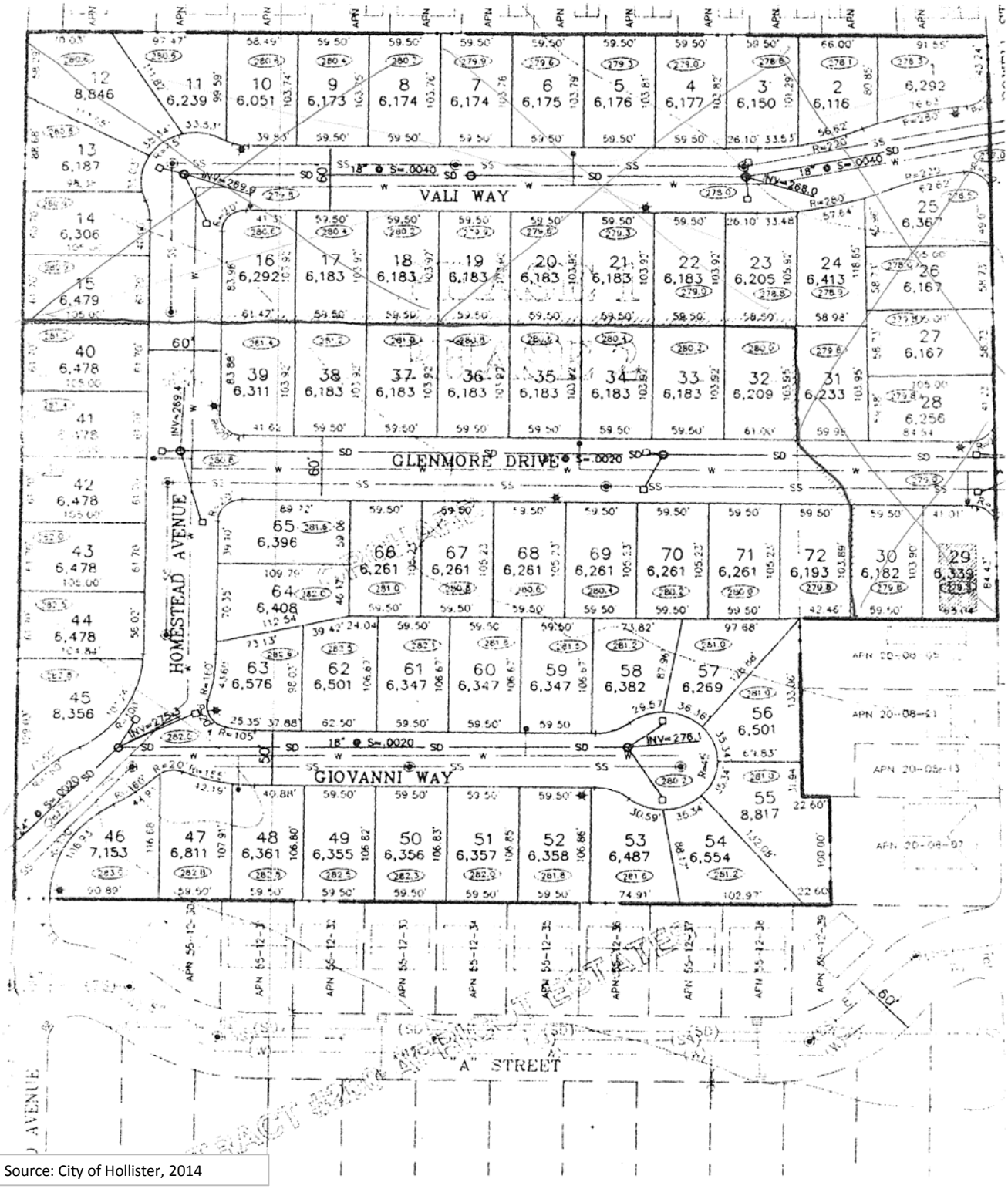

Source: City of Hollister, 2014

EXHIBIT 2
Project
Site Plan

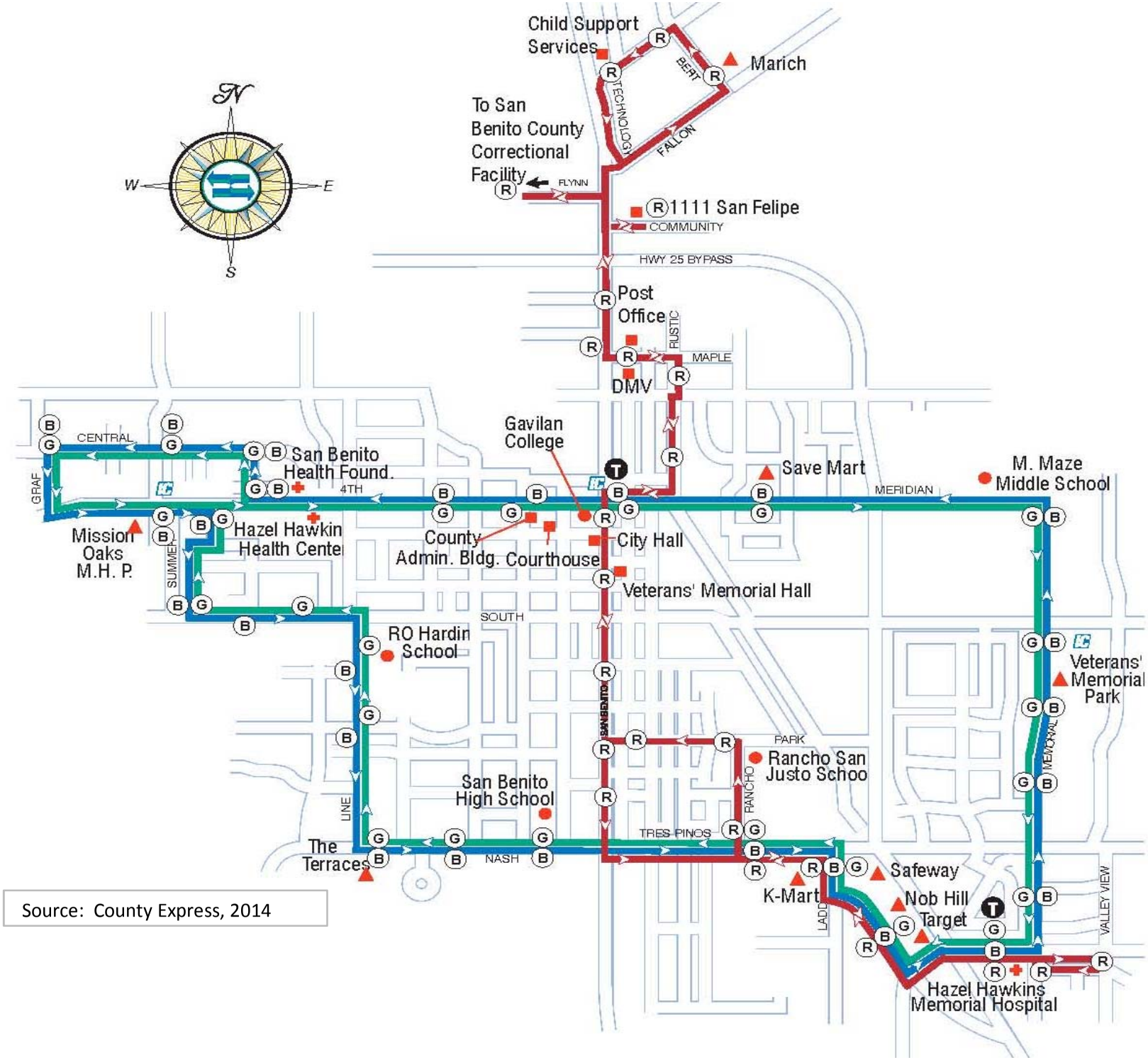

Source: County Express, 2014

EXHIBIT 3
Existing
Transit Routes

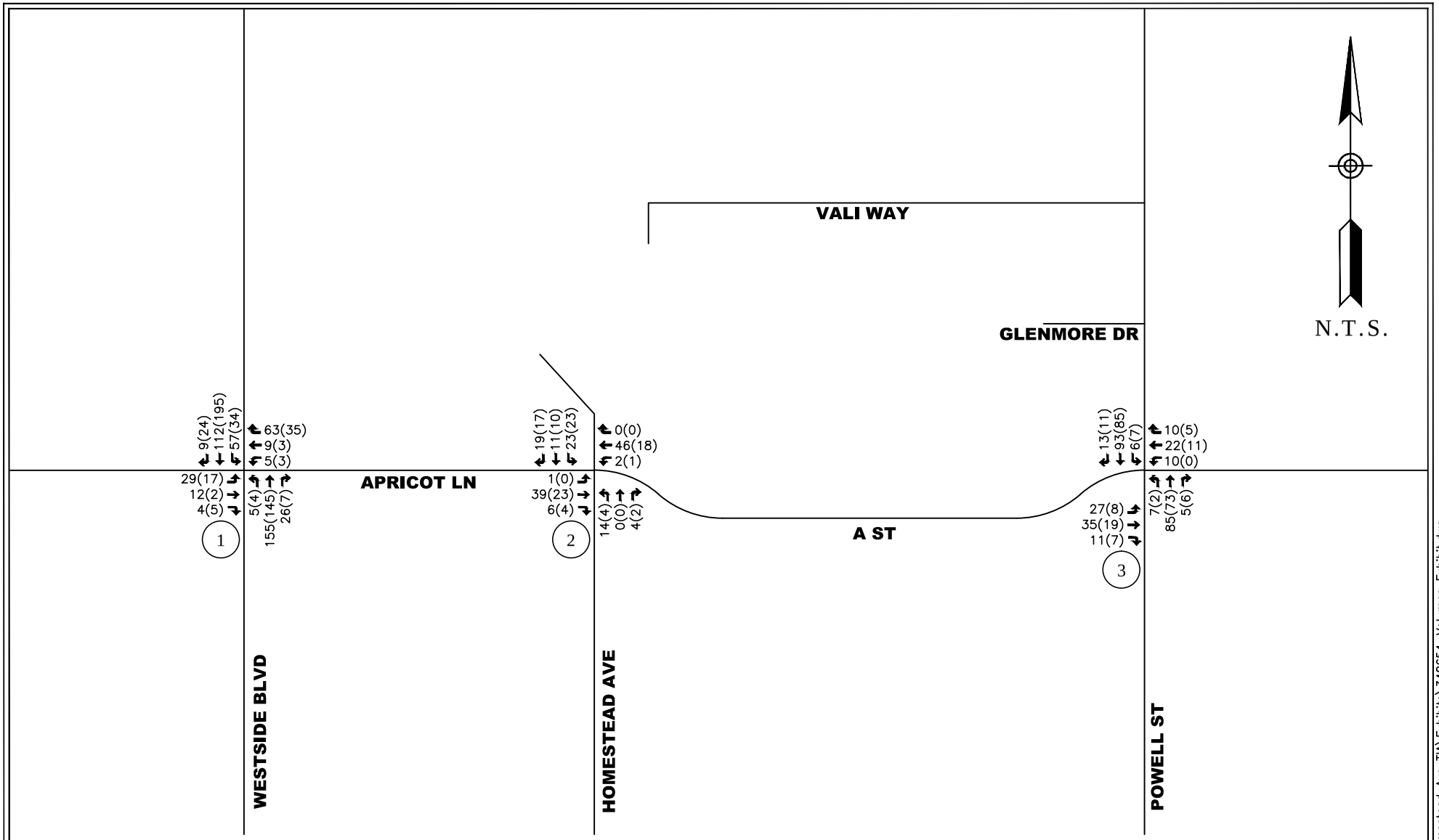

XX(YY) = AM(PM)

(ZZ) = INTERSECTION NUMBER

EXHIBIT 4
EXISTING CONDITIONS
AM AND PM PEAK HOUR TRAFFIC VOLUMES

Drawing: I:\2014\Jobs\348654 – Homestead Ave TIA\Exhibits\348654–Volumes Exhibit.dwg
Layout: EX–4 EXISTING
Feb 20, 2015, 10:03am

Hatch Mott MacDonald

	N-S Street	E-W Street	Existing Lane Configuration	Existing Intersection Control	LOS Standard	Existing Conditions				Existing Plus Project Conditions				Background Conditions				Background Plus Project Conditions				Cumulative Conditions			
						AM Peak Hr.		PM Peak Hr.		AM Peak Hr.		PM Peak Hr.		AM Peak Hr.		PM Peak Hr.		AM Peak Hr.		PM Peak Hr.		AM Peak Hr.		PM Peak Hr.	
						Delay (sec)	LOS	Delay (sec)	LOS	Delay (sec)	LOS	Delay (sec)	LOS	Delay (sec)	LOS	Delay (sec)	LOS	Delay (sec)	LOS	Delay (sec)	LOS	Delay (sec)	LOS	Delay (sec)	LOS
1	Westside Boulevard	Apricot Lane	NB 1-L/T/R SB 1-L/T/R EB 1-L/T/R WB 1-L/T/R	All-Way Stop	C	9.0	A	8.8	A	9.2	A	9.1	A	9.5	A	9.3	A	9.7	A	9.5	A	12.7	B	11.6	B
2	Homestead Avenue	Apricot Lane - "A" Street	NB 1-L/T/R SB 1-L/T/R EB 1-L/T/R WB 1-L/T/R	Two-Way Stop (EB/WB)	C	7.7	A	6.5	A	6.8	A	6.2	A	7.8	A	6.7	A	6.9	A	6.4	A	6.9	A	6.4	A
				Eastbound Approach	(C)	10.4	B	9.9	A	10.8	B	10.3	B	10.5	B	10.0	B	10.8	B	10.4	B	10.8	B	10.4	B
				Westbound Approach	(C)	10.8	B	10.1	B	11.0	B	10.0	B	10.8	B	10.1	B	11.0	B	10.1	B	11.0	B	10.0	B
				With Improvement		***7.6***	***A***	***7.3***	***A***	***7.7***	***A***	***7.5***	***A***	***7.6***	***A***	***7.3***	***A***	***7.7***	***A***	***7.5***	***A***	***7.7***	***A***	***7.5***	***A***
3	Powell Street	"A" Street	NB 1-L/T/R SB 1-L/T/R EB 1-L/T/R WB 1-L/T/R	Two-Way Stop (EB/WB)	C	4.5	A	2.5	A	4.5	A	2.7	A	4.5	A	2.5	A	4.6	A	2.7	A	4.5	A	2.7	A
				Eastbound Approach	(C)	12.0	B	10.6	B	11.9	B	10.6	B	12.1	B	10.6	B	11.9	B	10.7	B	12.1	B	10.8	B
				Westbound Approach	(C)	11.3	B	10.3	B	11.4	B	10.3	B	11.3	B	10.3	B	11.4	B	10.3	B	11.5	B	10.4	B
				With Improvement		***8.2***	***A***	***7.8***	***A***	***8.2***	***A***	***7.8***	***A***	***8.3***	***A***	***7.8***	***A***	***8.3***	***A***	***7.8***	***A***	***8.3***	***A***	***7.9***	***A***

Notes:
1. L, T, R = Left, Through, Right
2. NB, SB, EB, WB = Northbound, Southbound, Eastbound, Westbound
3. Analysis performed using 2010 Highway Capacity Manual methodologies.
4. Level of service standard for the City of Hollister is LOS C.

Hatch Mott MacDonald

348654 LOS2.xlsx

EXHIBIT 5A
Intersection
Levels of Service

Segment	Location	Daily Volume				
		Existing Conditions	Existing Plus Project Conditions	Background Conditions	Background Plus Project Conditions	Cumulative Conditions
Homestead Avenue	North of Apricot Lane - A Street	500	980	500	980	980
Glenmore Drive	West of Powell Street	20	110	20	110	110
Vali Way	West of Powell Street	275	390	275	390	390

Notes:

1. Existing volumes estimated via:
   a. Homestead Avenue - PM peak hour volume (at Homestead/Apricot-A) times 10.
   b. Glenmore Drive - 10 times number of existing homes on street
   c. Vali Way - segment count (see **Appendix A**).
2. Existing Plus Project volumes estimated using project trip assignment and anticipated diversions.
3. Background volumes estimated using trip assignment from approved projects.
4. Background Plus Project volumes estimated by combining rules for derivation of Existing Plus Project and Background volumes.
5. Cumulative volumes estimated by combining rules for derivation of Existing Plus Project and Background volumes, plus the addition of any applicable future growth.

Hatch Mott MacDonald

EXHIBIT 5B
Segment Volumes

	N-S Street	E-W Street	Existing Lane Configuration	Existing Intersection Control	Existing Conditions	Existing Plus Project Conditions	Background Conditions	Background Plus Project Conditions	Cumulative Conditions
1	Westside Boulevard	Apricot Lane	NB 1-L/T/R SB 1-L/T/R EB 1-L/T/R WB 1-L/T/R	All-Way Stop	**None Required**	**None Required**	**None Required**	**None Required**	**None Required**
2	Homestead Avenue	Apricot Lane - "A" Street	NB 1-L/T/R SB 1-L/T/R EB 1-L/T/R WB 1-L/T/R	Two-Way Stop (EB/WB) Eastbound Approach Westbound Approach	**Convert to All-Way Stop Control**	**Convert to All-Way Stop Control**	**Convert to All-Way Stop Control**	**Convert to All-Way Stop Control**	**Convert to All-Way Stop Control**
3	Powell Street	"A" Street	NB 1-L/T/R SB 1-L/T/R EB 1-L/T/R WB 1-L/T/R	Two-Way Stop (EB/WB) Eastbound Approach Westbound Approach	**Prohibit On-Street Parking OR Convert to All-Way Stop Control**	**Prohibit On-Street Parking OR Convert to All-Way Stop Control**	**Prohibit On-Street Parking OR Convert to All-Way Stop Control**	**Prohibit On-Street Parking OR Convert to All-Way Stop Control**	**Prohibit On-Street Parking OR Convert to All-Way Stop Control**

Notes:
1. L, T, R = Left, Through, Right
2. NB, SB, EB, WB = Northbound, Southbound, Eastbound, Westbound

EXHIBIT 5C
Recommended Intersection Improvements

Hatch Mott MacDonald

348654 LOS2.xlsx

Project Trip Generation

TRIP GENERATION RATES	ITE LAND USE CODE	DAILY TRIP RATE	AM PEAK HOUR				PM PEAK HOUR			
			PEAK HOUR RATE	% OF ADT	% IN	% OUT	PEAK HOUR RATE	% OF ADT	% IN	% OUT
Single-Family Detached Housing (per dwelling unit)	210	9.52	0.75	8%	25%	75%	1.00	11%	63%	37%

GENERATED TRIPS	PROJECT SIZE	DAILY TRIPS	AM PEAK HOUR				PM PEAK HOUR			
			PEAK HOUR TRIPS	% OF ADT	TRIPS IN	TRIPS OUT	PEAK HOUR TRIPS	% OF ADT	TRIPS IN	TRIPS OUT
Single-Family Detached Housing	63 units	600	47	8%	12	35	63	11%	40	23
Total Project Trip Generation:		**600**	**47**		**12**	**35**	**63**		**40**	**23**

Notes:

1. Trip generation rates from Institute of Transportation Engineers, "Trip Generation Manual," 9th Edition, 2012, unless otherwise noted.

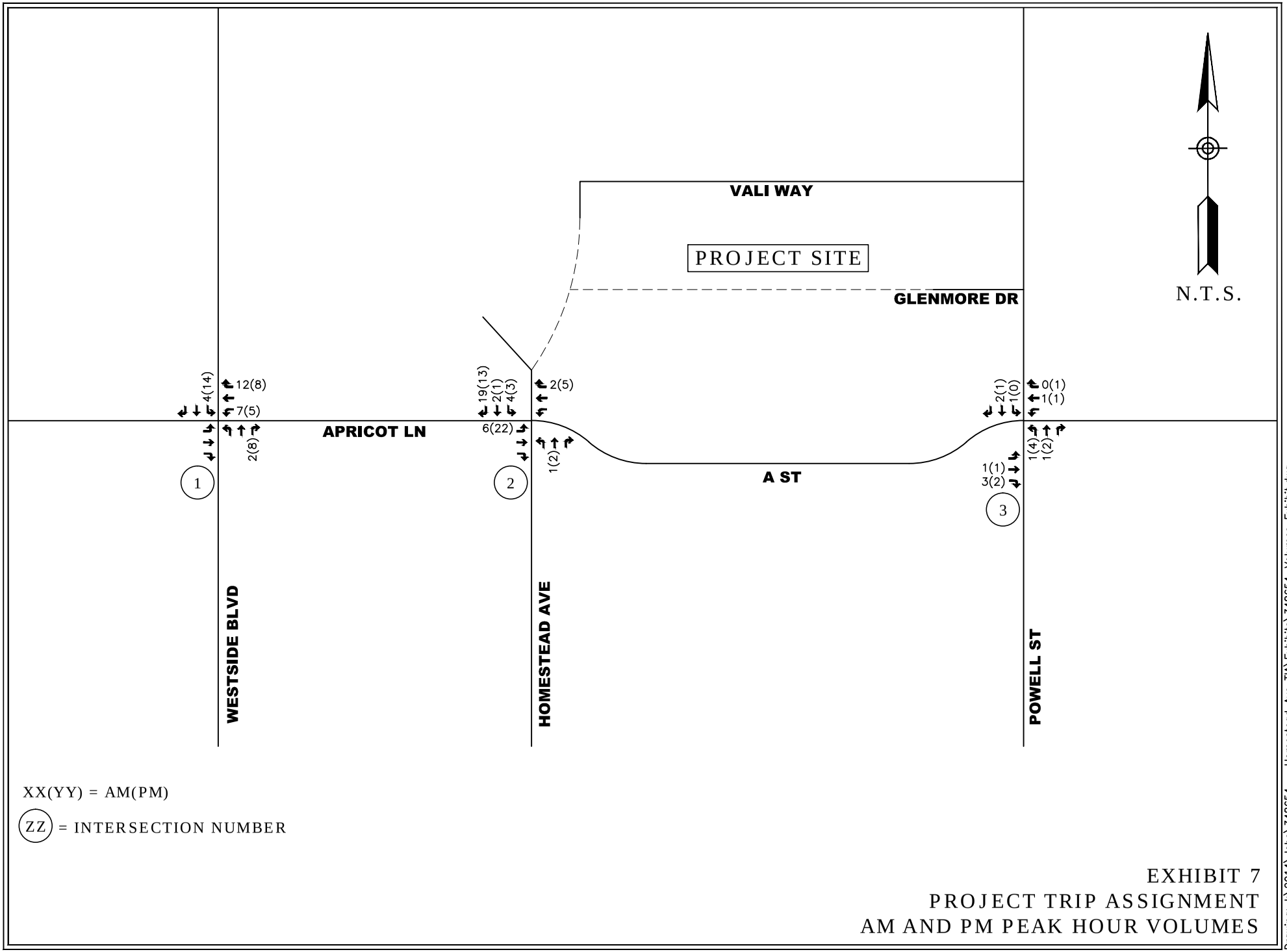

EXHIBIT 7
PROJECT TRIP ASSIGNMENT
AM AND PM PEAK HOUR VOLUMES

Drawing: I:\2014\Jobs\348654 – Homestead Ave TIA\Exhibits\348654–Volumes Exhibit.dwg
Layout: EX–7 ASSIGNMENT Feb 20, 2015, 1:42pm

Hatch Mott MacDonald

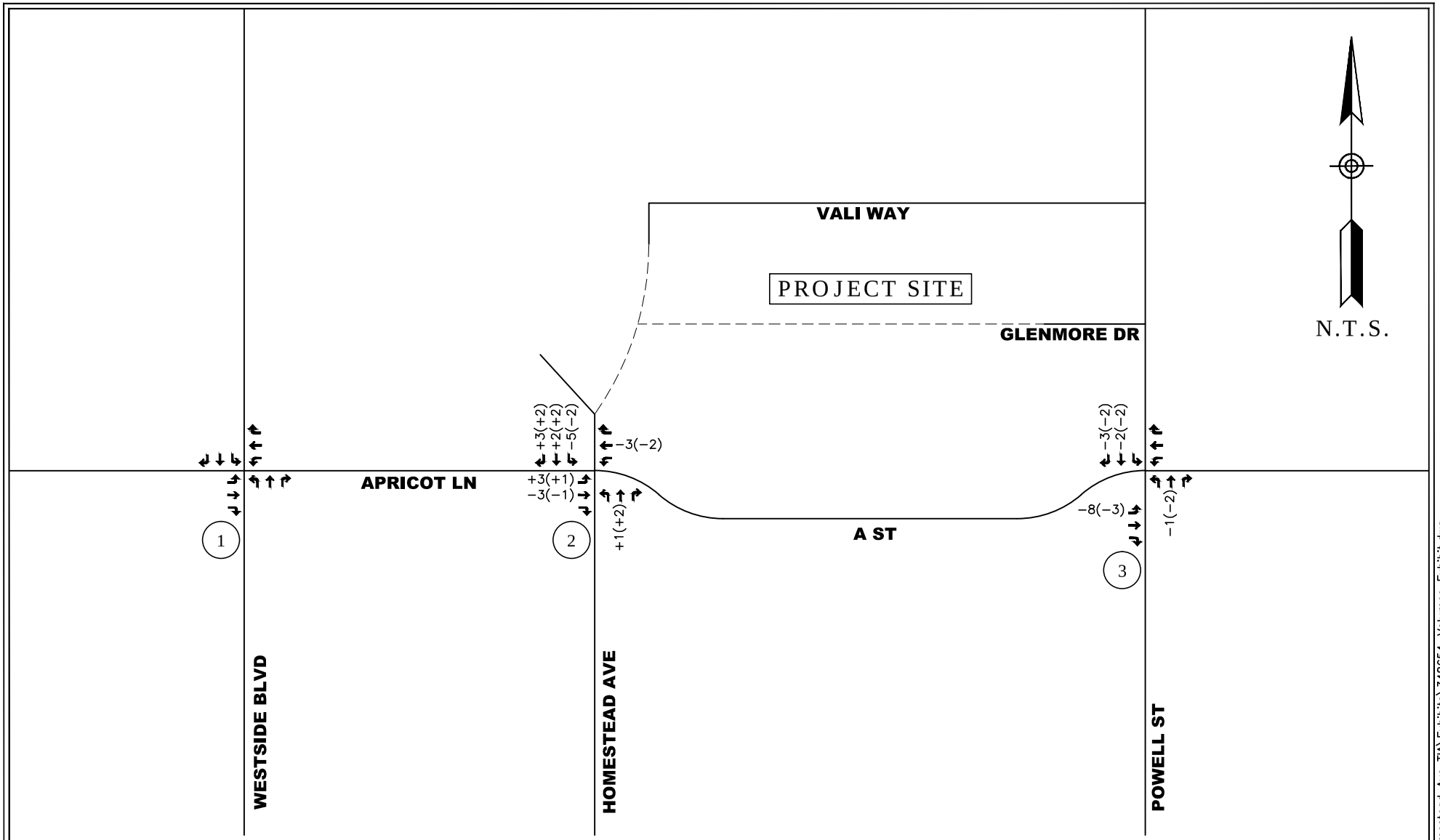

XX(YY) = AM(PM)

(ZZ) = INTERSECTION NUMBER

EXHIBIT 8
EXISTING TRAFFIC DIVERSIONS
AM AND PM PEAK HOUR VOLUMES

Drawing: I:\2014\Jobs\348654 – Homestead Ave TIA\Exhibits\348654–Volumes Exhibit.dwg
Layout: EX–8 DIVERSIONS
Feb 20, 2015, 1:45pm

Hatch Mott MacDonald

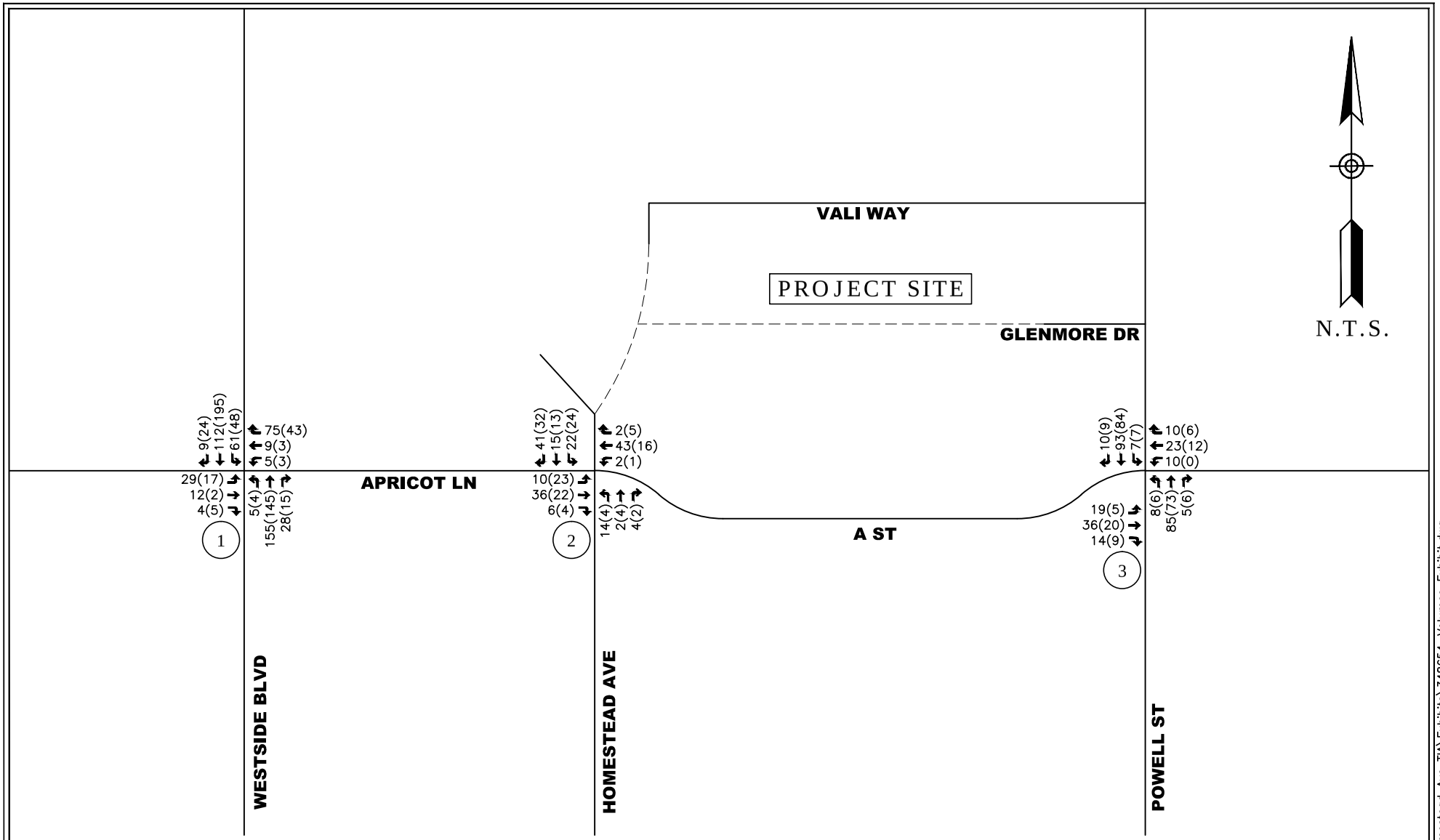

XX(YY) = AM(PM)

(ZZ) = INTERSECTION NUMBER

EXHIBIT 9
EXISTING PLUS PROJECT CONDITIONS
AM AND PM PEAK HOUR VOLUMES

Hatch Mott MacDonald

Drawing: I:\2014\Jobs\348654 – Homestead Ave TIA\Exhibits\348654–Volumes Exhibit.dwg
Layout: EX–9 EPP
Feb 20, 2015, 1:46pm

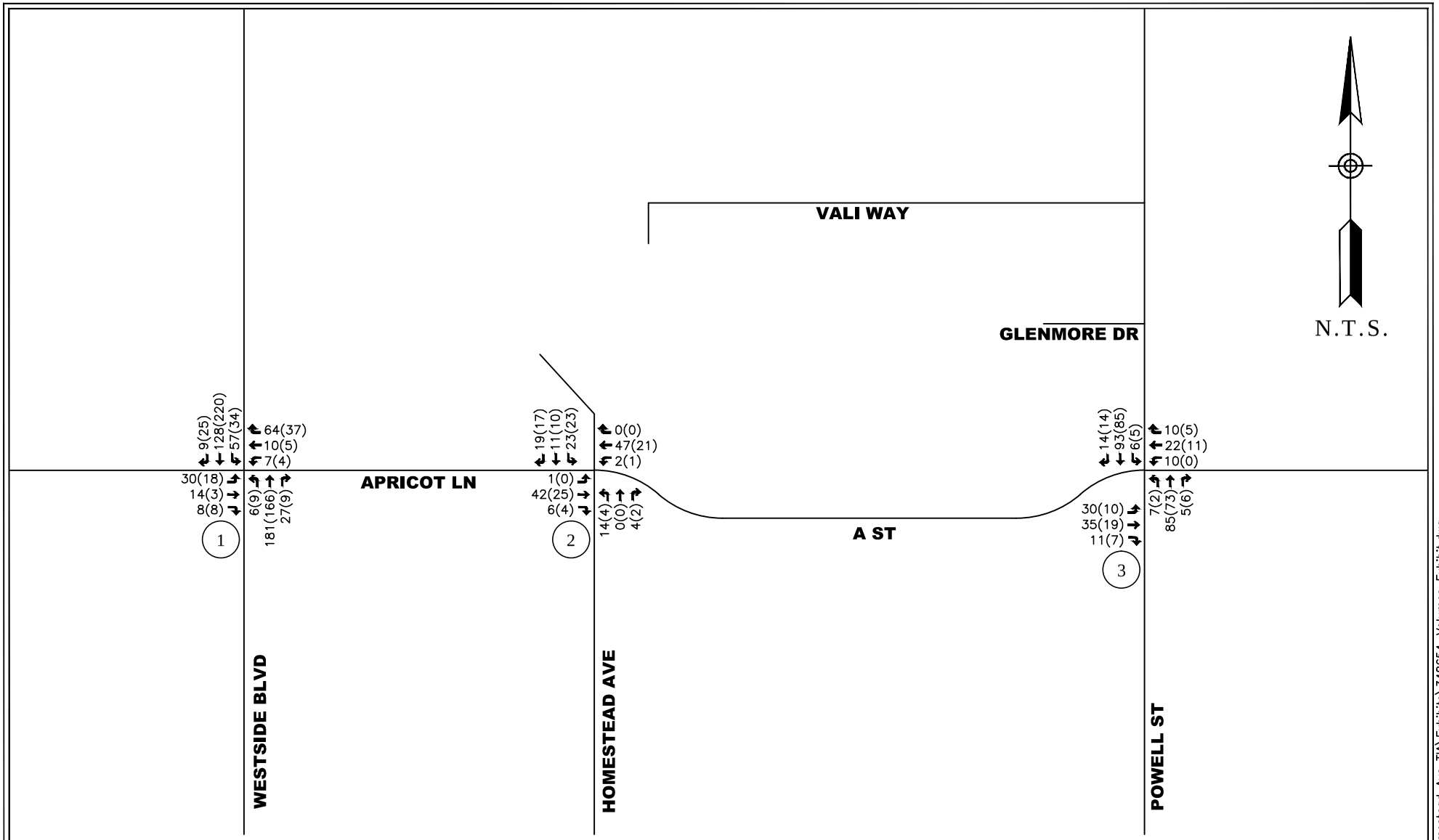

XX(YY) = AM(PM)

(ZZ) = INTERSECTION NUMBER

EXHIBIT 10
BACKGROUND CONDITIONS
AM AND PM PEAK HOUR VOLUMES

Hatch Mott MacDonald

Drawing: I:\2014\Jobs\348654 – Homestead Ave TIA\Exhibits\348654–Volumes Exhibit.dwg
Layout: EX–10 BACKGROUND Feb 20, 2015, 10:05am

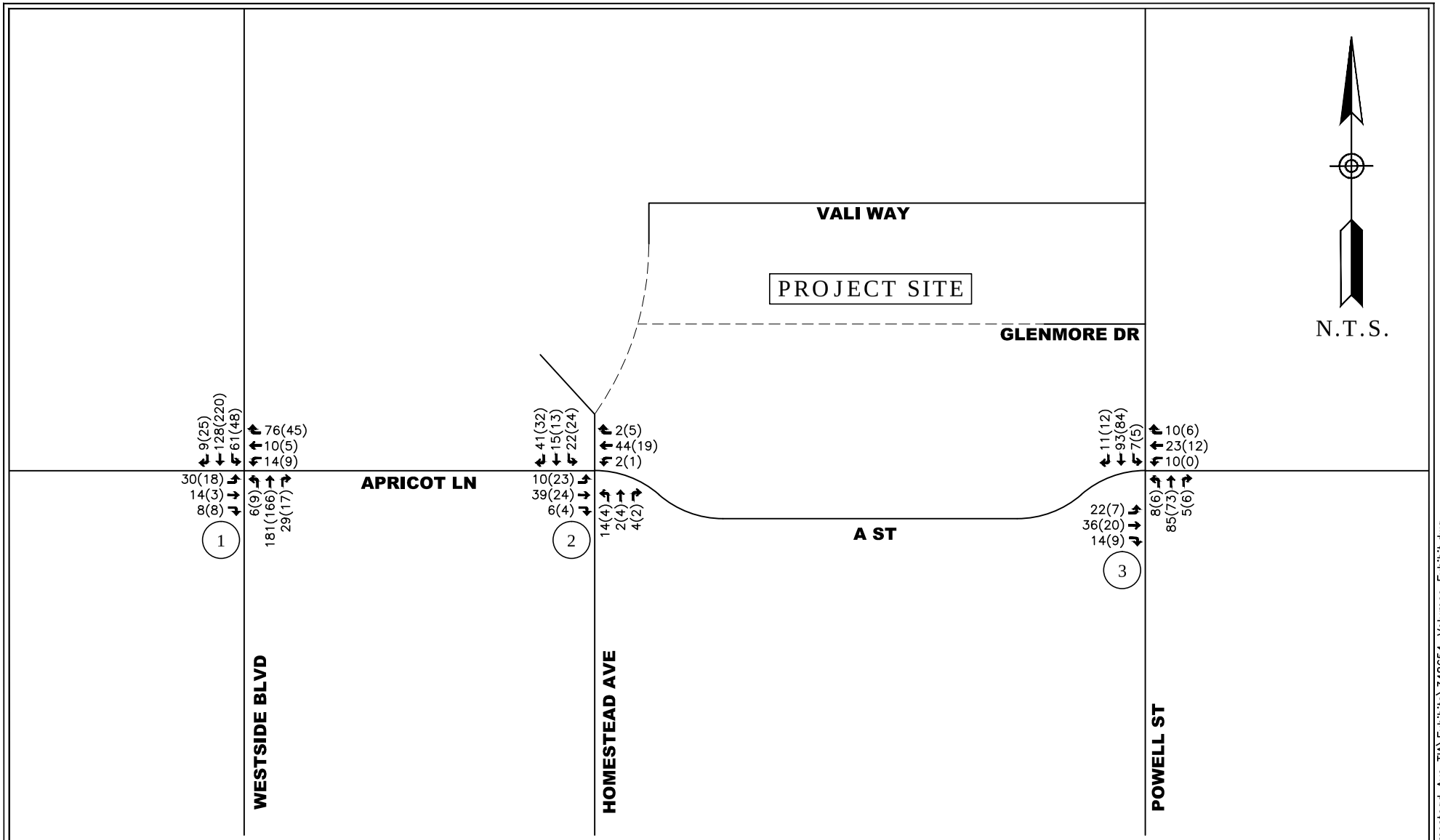

XX(YY) = AM(PM)

(ZZ) = INTERSECTION NUMBER

EXHIBIT 11
BACKGROUND PLUS PROJECT CONDITIONS
AM AND PM PEAK HOUR VOLUMES

Drawing: I:\2014\Jobs\348654 – Hornestead Ave TIA\Exhibits\348654–Volumes Exhibit.dwg
Layout: EX–11 BPP
Feb 20, 2015, 1:47pm

Hatch Mott MacDonald

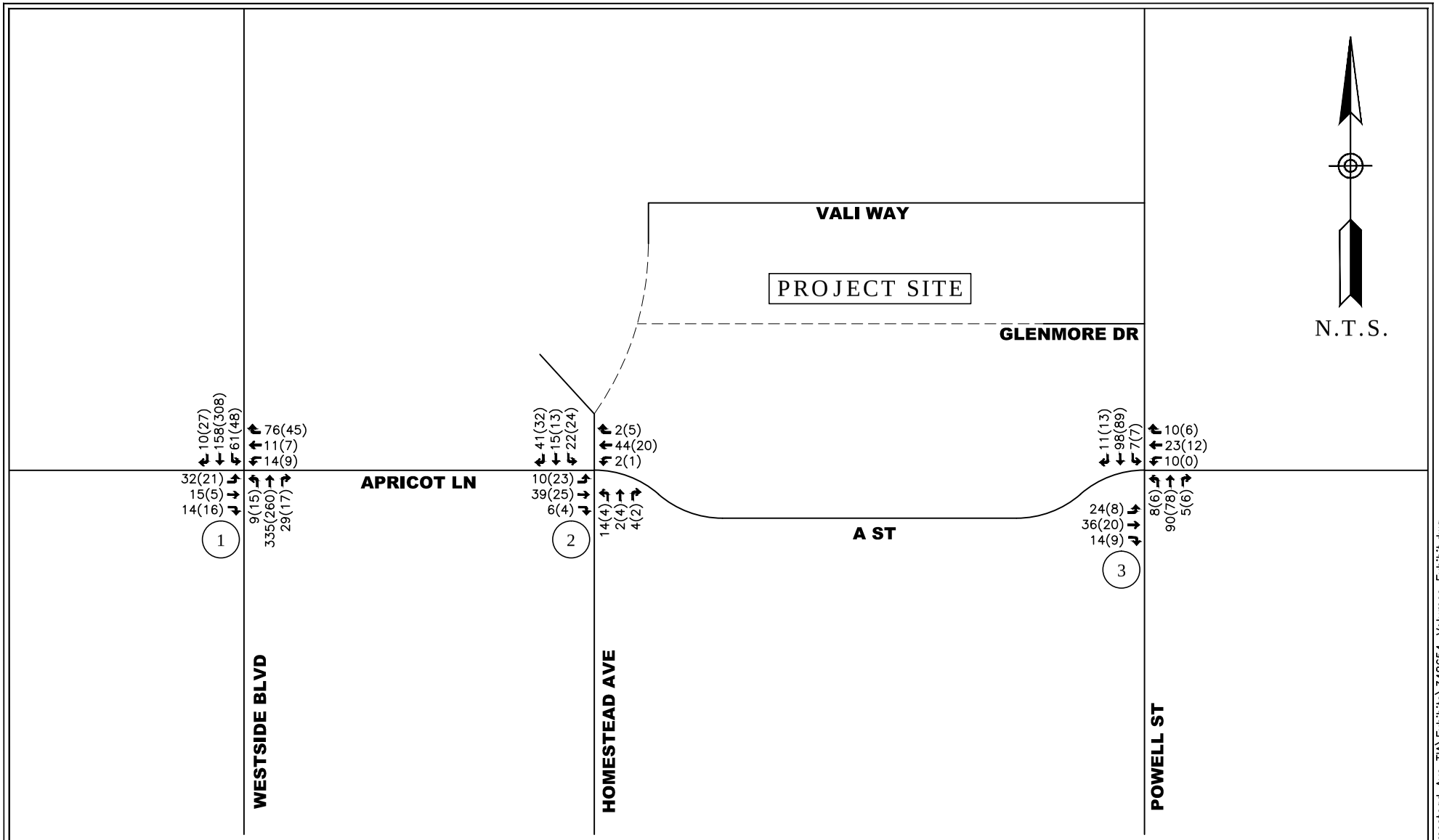

XX(YY) = AM(PM)

(ZZ) = INTERSECTION NUMBER

EXHIBIT 12
CUMULATIVE CONDITIONS
AM AND PM PEAK HOUR VOLUMES

Hatch Mott MacDonald

Drawing: I:\2014\Jobs\348654 – Hornestead Ave TIA\Exhibits\348654–Volumes Exhibit.dwg
Layout: EX–12 CUMULATIVE
Feb 20, 2015, 1:47pm

Location	Reported or Observed Challenge	Recommended Improvement	Lead Agency
1. School Access	All modes enter campus from Line Street which causes notable congestion.	a. It is recommended the school consider providing access from Homestead Avenue. b. Additionally, formal walking school bus leaders can be given a key to the Walnut Lane Entrance.	Hollister School District
2. School Area	Drivers not complying with basic "rules of the road" (taking on cell phones, rolling thorugh Stop signs, etc.).	Request City of Hollister Police office to routinely observe morning and afternoon periods.	City of Hollister
3. Campus Parking Loop	Crosswalk in north end of parking loop is faded.	a. Stripe standard high visibility crosswalk. b. Re-orient signs to face roadway. c. Stripe directional arrows at entrance and exit.	Hollister School District
4. Line Street at Apricot Lane	Key school access intersection with only standard crosswalks on only two legs.	Stripe high visibility yellow crosswalks on all 4 legs.	City of Hollister
5. Line Street at Head Start parking loop entrance	Vegetation Obstructs sidewalk.	Trip vegetation.	City of Hollister
6. Line Street and Peridot Court	a. Vehicles turn onto Peridot Court unaware there is no outlet. b. Uncontrolled school crossing with only a standard crosswalk.	a. Post one "No Outlet" sign. b. Stripe high visibility yellow crosswalk.	City of Hollister
7. Line Street between Steinbeck Drive and Head Start Parking Loop exit	Northbound vehicle queue (parent drop-off and pickup) blocks through lane. Frustrated drivers reported driving in opposite lane to get around line-up.	Implement time-limited parking restriction between 7-9am ane 12-3 on weekdays.	City of Hollister
8. Westside Boulevard and Apricot Lane	Westside Boulevard is very wide street for children to cross.	a. Construct curb extensions at northeast and northwest corners. b. Stripe advance stop lines on all four legs.	City of Hollister
9. Westside Boulevard and Steinbeck Drive	a. Crosswalks are in a school zone but not school zone yellow. b. Westside Boulevard is not stop controlled at this intersection and is very wide street for children to cross.	a. Stripe all 4 crosswalks at high visibility yellow. b. Install curb extensions on all four corners.	City of Hollister
10. Westside Boulevard between Steinbeck Drive and Apricot Lane, east side	No sidewalk, children walk in roadway.	Construct sidewalk from Apricot Lane to northern edge of undeveloped property.	City of Hollister
11. Line Street between Steinbeck Drive and Apricot Lane, west side	No sidewalk, children walk in roadway.	Construct sidewalk.	City of Hollister
12. Line Street at South Street	Standard crosswalks at a key school crossing.	a. Stripe all 3 crosswalks as high visibility yellow. b. Stripe advance stop lines at all 3 crosswalks.	City of Hollister

Source: *Safe Routes to School Needs Assessment and Preliminary Recommendations - Calaveras Elementary and R. O. Hardin Elementary* , Alta Planning and Design and Harris & Associates, February 2014.

EXHIBIT 13
Opportunities and Recommended Improvements near R. O. Hardin Elementary

Appendix A

Level of Service (LOS) Description

A1. Unsignalized Intersections with All-Way Stop Control (AWSC)
A2. Unsignalized Intersections with Two-Way Stop Control (TWSC)

APPENDIX A1

LEVEL OF SERVICE (LOS) DESCRIPTION
UNSIGNALIZED INTERSECTIONS WITH ALL-WAY STOP CONTROL (AWSC)

AWSC intersections require every vehicle to stop at the intersection before proceeding. Since each driver must stop, the judgement as to whether to proceed into the intersection is a function of traffic conditions on the other approaches. While giving priority to the driver on the right is a recognized rule in some areas, it is not a good descriptor of actual intersection operations. What happens is the development of a consensus of right-of-way that alternates between the drivers on the intersection approaches, a consensus that depends primarily on the intersection geometry and the arrival patterns at the stop line.

If no traffic is present on the other approaches, a driver can proceed immediately after the stop is made. If there is traffic on one or more of the other approaches, a driver proceeds only after determining that there are no vehicles currently in the intersection and that it is the driver's turn to proceed. Since no traffic signal controls the stream movement or allocates the right-of-way to each conflicting stream, the rate of departure is controlled by the interaction between the traffic streams themselves.

For AWSC intersections, the average control delay (in seconds per vehicle) is used as the primary measure of performance. Control delay is the increased time of travel for a vehicle approaching and passing through an AWSC intersection, compared with a free-flow vehicle if it were not required to slow down or stop at the intersection.

The criteria for AWSC intersections have different threshold values than do those for signalized intersections, primarily because drivers expect different levels of performance from different kinds of traffic control devices (i.e. traffic signals, two way stop or all way stop, etc.). The expectation is that a signalized intersection is designed to carry higher traffic volumes than an AWSC intersection and a higher level of control delay is acceptable at a signalized intersection for the same LOS.

For AWSC analysis using the HCM 2010 method, the LOS shown reflects the weighted average of the delay on each of the approaches.

LEVEL OF SERVICE (LOS) CRITERIA FOR AWSC INTERSECTIONS
(Reference 2010 Highway Capacity Manual)

Level of Service	Control Delay (seconds / vehicle)
A	**0 - 10**
B	**>10 - 15**
C	**>15 - 25**
D	**>25 - 35**
E	**>35 - 50**
F	**>50**

APPENDIX A2

LEVEL OF SERVICE (LOS) DESCRIPTION
UNSIGNALIZED INTERSECTIONS WITH TWO-WAY STOP CONTROL (TWSC)

TWSC intersections are widely used and stop signs are used to control vehicle movements at such intersections. At TWSC intersections, the stop-controlled approaches are referred to as the minor street approaches; they can be either public streets or private driveways. The intersection approaches that are not controlled by stop signs are referred to as the major street approaches. A three-leg intersection is considered to be a standard type of TWSC intersection if the single minor street approach (i.e. the stem of the T configuration) is controlled by a stop sign. Three-leg intersections where two of the three approaches are controlled by stop signs are a special form of unsignalized intersection control.

At TWSC intersections, drivers on the controlled approaches are required to select gaps in the major street flow through which to execute crossing or turning maneuvers on the basis of judgment. In the presence of a queue, each driver on the controlled approach must use some time to move into the front-of-queue position and prepare to evaluate gaps in the major street flow. Capacity analysis at TWSC intersections depends on a clear description and understanding of the interaction of drivers on the minor or stop-controlled approach with drivers on the major street. Both gap acceptance and empirical models have been developed to describe this interaction.

Thus, the capacity of the controlled legs is based on three factors:

- the distribution of gaps in the major street traffic stream;
- driver judgment in selecting gaps through which to execute the desired maneuvers; and
- the follow-up time required by each driver in a queue.

The delay experienced by a motorist is made up of a number of factors that relate to control, geometrics, traffic and incidents. Total delay is the difference between the travel time actually experienced and the reference travel time that would result during base conditions, in the absence of incident, control, traffic or geometric delay. Average control delay for any particular minor movement is a function of the capacity of the approach and the degree of saturation and referred to as level of service.

LEVEL OF SERVICE (LOS) CRITERIA FOR TWSC INTERSECTIONS

(Reference 2010 Highway Capacity Manual)

Level of Service	Control Delay (seconds / vehicle)
A	**0 - 10**
B	**>10 - 15**
C	**>15 - 25**
D	**>25 - 35**
E	**>35 - 50**
F	**>50**

Appendix B

Traffic Counts

Traffic Data Service

Campbell, CA
(408) 377-2988
tdsbay@cs.com

File Name : 1AM FINAL
Site Code : 00000001
Start Date : 1/22/2015
Page No : 1

Groups Printed- Vehicles - Buses - Trucks

	WESTSIDE BLVD Southbound					APRICOT LN Westbound					WESTSIDE BLVD Northbound					APRICOT LN Eastbound					
Start Time	Right	Thru	Left	Peds	App. Total	Right	Thru	Left	Peds	App. Total	Right	Thru	Left	Peds	App. Total	Right	Thru	Left	Peds	App. Total	Int. Total
07:00 AM	1	20	3	0	24	14	2	0	0	16	1	22	1	0	24	1	3	6	0	10	74
07:15 AM	0	33	8	0	41	11	2	0	0	13	1	31	1	0	33	1	3	7	0	11	98
07:30 AM	1	16	14	0	31	15	4	0	0	19	9	45	3	0	57	2	2	7	1	12	119
07:45 AM	5	26	11	0	42	20	1	3	0	24	9	56	1	0	66	0	6	9	0	15	147
Total	7	95	36	0	138	60	9	3	0	72	20	154	6	0	180	4	14	29	1	48	438
08:00 AM	3	37	24	2	66	17	2	2	0	21	7	23	0	0	30	1	1	6	1	9	126
08:15 AM	1	32	6	0	39	11	1	4	0	16	0	26	1	0	27	3	5	5	0	13	95
08:30 AM	6	36	14	0	56	16	0	1	0	17	1	23	1	0	25	1	2	2	0	5	103
08:45 AM	4	19	8	0	31	18	3	2	0	23	1	35	1	0	37	2	0	3	0	5	96
Total	14	124	52	2	192	62	6	9	0	77	9	107	3	0	119	7	8	16	1	32	420
Grand Total	21	219	88	2	330	122	15	12	0	149	29	261	9	0	299	11	22	45	2	80	858
Apprch %	6.4	66.4	26.7	0.6		81.9	10.1	8.1	0		9.7	87.3	3	0		13.8	27.5	56.2	2.5		
Total %	2.4	25.5	10.3	0.2	38.5	14.2	1.7	1.4	0	17.4	3.4	30.4	1	0	34.8	1.3	2.6	5.2	0.2	9.3	
Vehicles	20	210	85	2	317	118	15	12	0	145	29	256	8	0	293	11	21	43	2	77	832
% Vehicles	95.2	95.9	96.6	100	96.1	96.7	100	100	0	97.3	100	98.1	88.9	0	98	100	95.5	95.6	100	96.2	97
Buses	1	8	0	0	9	2	0	0	0	2	0	1	0	0	1	0	0	2	0	2	14
% Buses	4.8	3.7	0	0	2.7	1.6	0	0	0	1.3	0	0.4	0	0	0.3	0	0	4.4	0	2.5	1.6
Trucks	0	1	3	0	4	2	0	0	0	2	0	4	1	0	5	0	1	0	0	1	12
% Trucks	0	0.5	3.4	0	1.2	1.6	0	0	0	1.3	0	1.5	11.1	0	1.7	0	4.5	0	0	1.2	1.4

	WESTSIDE BLVD Southbound				APRICOT LN Westbound				WESTSIDE BLVD Northbound				APRICOT LN Eastbound				
Start Time	Right	Thru	Left	App. Total	Right	Thru	Left	App. Total	Right	Thru	Left	App. Total	Right	Thru	Left	App. Total	Int. Total
Peak Hour Analysis From 07:00 AM to 08:45 AM - Peak 1 of 1																	
Peak Hour for Entire Intersection Begins at 07:15 AM																	
07:15 AM	0	33	8	41	11	2	0	13	1	31	1	33	1	3	7	11	98
07:30 AM	1	16	14	31	15	**4**	0	19	**9**	45	**3**	57	**2**	2	7	11	118
07:45 AM	**5**	26	11	42	**20**	1	**3**	**24**	9	**56**	1	**66**	0	**6**	**9**	**15**	**147**
08:00 AM	3	**37**	**24**	**64**	17	2	2	21	7	23	0	30	1	1	6	8	123
Total Volume	9	112	57	178	63	9	5	77	26	155	5	186	4	12	29	45	486
% App. Total	5.1	62.9	32		81.8	11.7	6.5		14	83.3	2.7		8.9	26.7	64.4		
PHF	.450	.757	.594	.695	.788	.563	.417	.802	.722	.692	.417	.705	.500	.500	.806	.750	.827

Traffic Data Service

Campbell, CA
(408) 377-2988
tdsbay@cs.com

File Name : 1AM FINAL
Site Code : 00000001
Start Date : 1/22/2015
Page No : 2

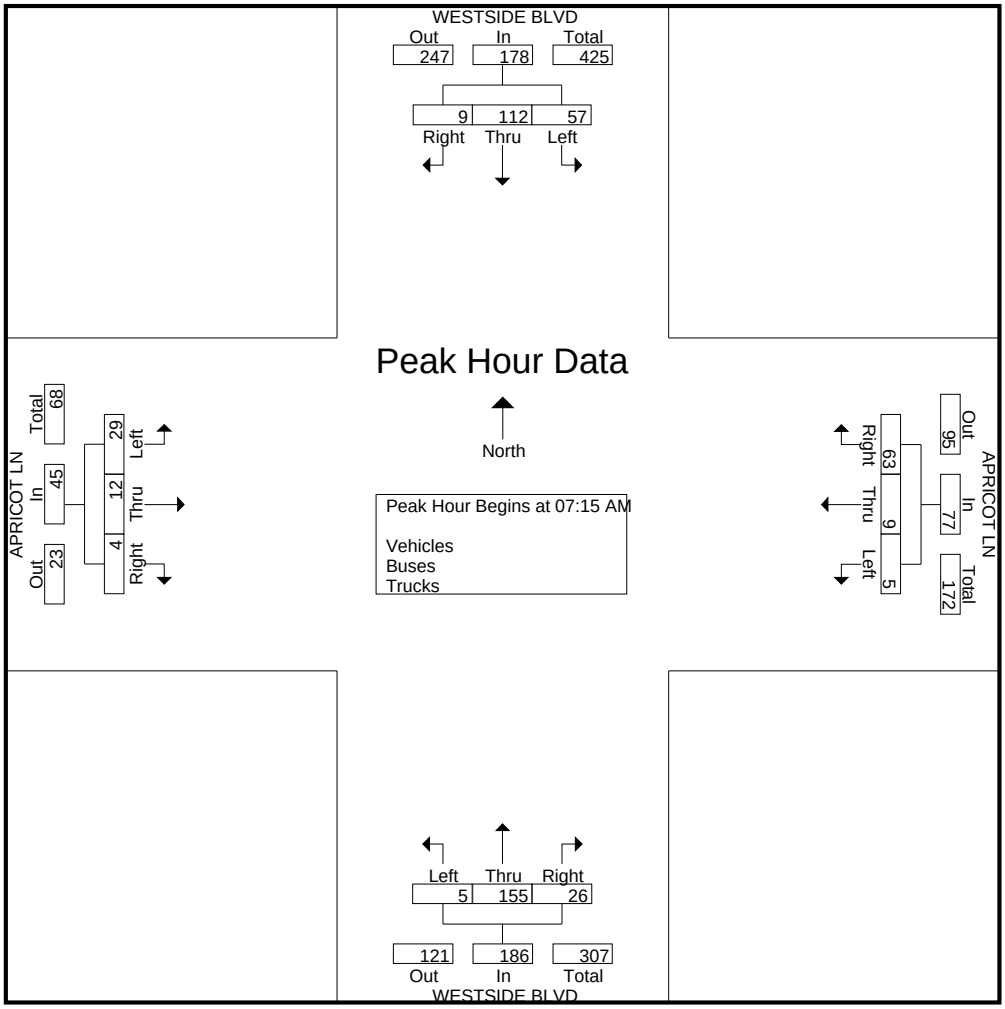

Traffic Data Service

Campbell, CA
(408) 377-2988
tdsbay@cs.com

File Name : 1PM FINAL
Site Code : 00000001
Start Date : 1/22/2015
Page No : 1

Groups Printed- Vehicles - Buses - Trucks

	WESTSIDE BLVD Southbound					APRICOT LN Westbound					WESTSIDE BLVD Northbound					APRICOT LN Eastbound					
Start Time	Right	Thru	Left	Peds	App. Total	Right	Thru	Left	Peds	App. Total	Right	Thru	Left	Peds	App. Total	Right	Thru	Left	Peds	App. Total	Int. Total
04:00 PM	6	50	8	0	64	6	1	0	0	7	3	40	1	0	44	2	0	6	0	8	123
04:15 PM	8	49	9	0	66	22	1	3	0	26	2	30	1	0	33	1	0	5	2	8	133
04:30 PM	9	53	10	0	72	5	1	0	0	6	1	42	0	0	43	2	1	2	0	5	126
04:45 PM	1	43	7	0	51	2	0	0	1	3	1	33	2	1	37	0	1	4	1	6	97
Total	24	195	34	0	253	35	3	3	1	42	7	145	4	1	157	5	2	17	3	27	479
05:00 PM	8	39	11	0	58	4	2	0	0	6	0	45	0	0	45	1	2	3	0	6	115
05:15 PM	9	32	10	0	51	4	2	0	0	6	0	47	2	0	49	3	0	2	1	6	112
05:30 PM	9	45	11	0	65	6	2	1	2	11	1	41	1	0	43	2	3	1	0	6	125
05:45 PM	10	33	13	0	56	5	1	0	0	6	1	42	2	0	45	2	0	4	1	7	114
Total	36	149	45	0	230	19	7	1	2	29	2	175	5	0	182	8	5	10	2	25	466
Grand Total	60	344	79	0	483	54	10	4	3	71	9	320	9	1	339	13	7	27	5	52	945
Apprch %	12.4	71.2	16.4	0		76.1	14.1	5.6	4.2		2.7	94.4	2.7	0.3		25	13.5	51.9	9.6		
Total %	6.3	36.4	8.4	0	51.1	5.7	1.1	0.4	0.3	7.5	1	33.9	1	0.1	35.9	1.4	0.7	2.9	0.5	5.5	
Vehicles	59	341	79	0	479	54	10	4	3	71	9	318	9	1	337	13	7	27	5	52	939
% Vehicles	98.3	99.1	100	0	99.2	100	100	100	100	100	100	99.4	100	100	99.4	100	100	100	100	100	99.4
Buses	0	3	0	0	3	0	0	0	0	0	0	2	0	0	2	0	0	0	0	0	5
% Buses	0	0.9	0	0	0.6	0	0	0	0	0	0	0.6	0	0	0.6	0	0	0	0	0	0.5
Trucks	1	0	0	0	1	0	0	0	0	0	0	0	0	0	0	0	0	0	0	0	1
% Trucks	1.7	0	0	0	0.2	0	0	0	0	0	0	0	0	0	0	0	0	0	0	0	0.1

	WESTSIDE BLVD Southbound				APRICOT LN Westbound				WESTSIDE BLVD Northbound				APRICOT LN Eastbound				
Start Time	Right	Thru	Left	App. Total	Right	Thru	Left	App. Total	Right	Thru	Left	App. Total	Right	Thru	Left	App. Total	Int. Total
Peak Hour Analysis From 04:00 PM to 05:45 PM - Peak 1 of 1																	
Peak Hour for Entire Intersection Begins at 04:00 PM																	
04:00 PM	6	50	8	64	6	**1**	0	7	**3**	40	1	**44**	**2**	0	**6**	**8**	123
04:15 PM	8	49	9	66	**22**	1	**3**	**26**	2	30	1	33	1	0	5	6	**131**
04:30 PM	**9**	**53**	**10**	**72**	5	1	0	6	1	**42**	0	43	2	**1**	2	5	126
04:45 PM	1	43	7	51	2	0	0	2	1	33	**2**	36	0	1	4	5	94
Total Volume	24	195	34	253	35	3	3	41	7	145	4	156	5	2	17	24	474
% App. Total	9.5	77.1	13.4		85.4	7.3	7.3		4.5	92.9	2.6		20.8	8.3	70.8		
PHF	.667	.920	.850	.878	.398	.750	.250	.394	.583	.863	.500	.886	.625	.500	.708	.750	.905

Traffic Data Service

Campbell, CA
(408) 377-2988
tdsbay@cs.com

File Name : 1PM FINAL
Site Code : 00000001
Start Date : 1/22/2015
Page No : 2

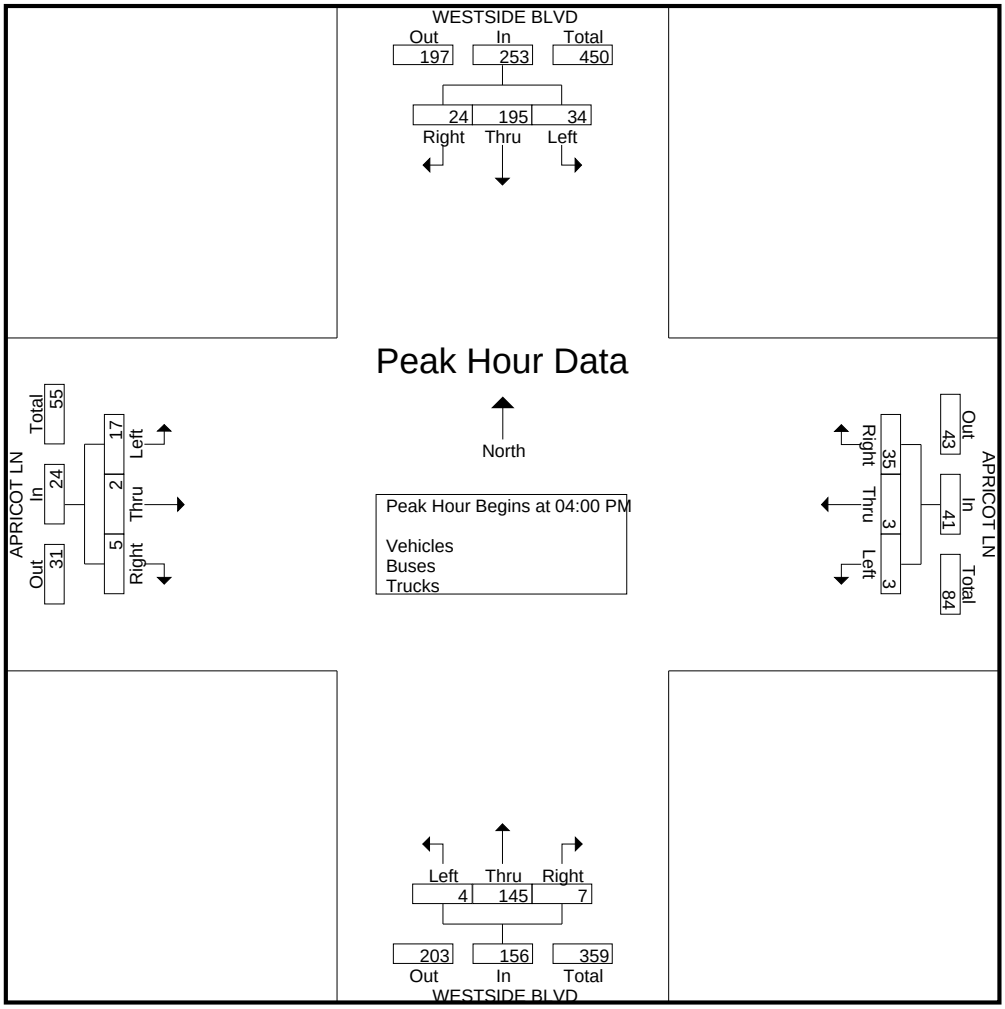

Traffic Data Service

Campbell, CA
(408) 377-2988
tdsbay@cs.com

File Name : 2AM FINAL
Site Code : 00000002
Start Date : 1/22/2015
Page No : 1

Groups Printed- Vehicles - Buses - Trucks

	HOMESTEAD AVE Southbound					A ST Westbound					HOMESTEAD AVE Northbound					APRICOT LN Eastbound					
Start Time	Right	Thru	Left	Peds	App. Total	Right	Thru	Left	Peds	App. Total	Right	Thru	Left	Peds	App. Total	Right	Thru	Left	Peds	App. Total	Int. Total
07:00 AM	0	1	0	0	1	0	7	0	0	7	0	0	3	0	3	0	5	0	0	5	16
07:15 AM	1	0	1	1	3	0	4	0	0	4	0	0	3	0	3	2	4	0	0	6	16
07:30 AM	1	0	1	0	2	0	11	0	0	11	2	0	2	0	4	2	8	0	1	11	28
07:45 AM	2	2	1	2	7	0	13	0	0	13	0	0	6	0	6	0	8	0	0	8	34
Total	4	3	3	3	13	0	35	0	0	35	2	0	14	0	16	4	25	0	1	30	94
08:00 AM	4	2	5	12	23	0	17	0	5	22	1	0	3	0	4	3	8	1	0	12	61
08:15 AM	12	7	16	2	37	0	5	2	0	7	1	0	3	0	4	1	15	0	0	16	64
08:30 AM	2	4	4	3	13	0	7	0	1	8	0	0	0	1	1	1	8	0	1	10	32
08:45 AM	2	1	0	0	3	0	11	3	0	14	2	0	4	0	6	1	4	0	0	5	28
Total	20	14	25	17	76	0	40	5	6	51	4	0	10	1	15	6	35	1	1	43	185
Grand Total	24	17	28	20	89	0	75	5	6	86	6	0	24	1	31	10	60	1	2	73	279
Apprch %	27	19.1	31.5	22.5		0	87.2	5.8	7		19.4	0	77.4	3.2		13.7	82.2	1.4	2.7		
Total %	8.6	6.1	10	7.2	31.9	0	26.9	1.8	2.2	30.8	2.2	0	8.6	0.4	11.1	3.6	21.5	0.4	0.7	26.2	
Vehicles	23	17	28	20	88	0	72	5	6	83	6	0	24	1	31	10	58	1	2	71	273
% Vehicles	95.8	100	100	100	98.9	0	96	100	100	96.5	100	0	100	100	100	100	96.7	100	100	97.3	97.8
Buses	1	0	0	0	1	0	2	0	0	2	0	0	0	0	0	0	0	0	0	0	3
% Buses	4.2	0	0	0	1.1	0	2.7	0	0	2.3	0	0	0	0	0	0	0	0	0	0	1.1
Trucks	0	0	0	0	0	0	1	0	0	1	0	0	0	0	0	0	2	0	0	2	3
% Trucks	0	0	0	0	0	0	1.3	0	0	1.2	0	0	0	0	0	0	3.3	0	0	2.7	1.1

	HOMESTEAD AVE Southbound				A ST Westbound				HOMESTEAD AVE Northbound				APRICOT LN Eastbound				
Start Time	Right	Thru	Left	App. Total	Right	Thru	Left	App. Total	Right	Thru	Left	App. Total	Right	Thru	Left	App. Total	Int. Total
Peak Hour Analysis From 07:00 AM to 08:45 AM - Peak 1 of 1																	
Peak Hour for Entire Intersection Begins at 07:30 AM																	
07:30 AM	1	0	1	2	0	11	0	11	**2**	0	2	4	2	8	0	10	27
07:45 AM	2	2	1	5	0	13	0	13	0	0	**6**	**6**	0	8	0	8	32
08:00 AM	4	2	5	11	0	**17**	0	**17**	1	0	3	4	**3**	8	**1**	12	44
08:15 AM	**12**	**7**	**16**	**35**	0	5	**2**	7	1	0	3	4	1	**15**	0	**16**	**62**
Total Volume	19	11	23	53	0	46	2	48	4	0	14	18	6	39	1	46	165
% App. Total	35.8	20.8	43.4		0	95.8	4.2		22.2	0	77.8		13	84.8	2.2		
PHF	.396	.393	.359	.379	.000	.676	.250	.706	.500	.000	.583	.750	.500	.650	.250	.719	.665

Traffic Data Service

Campbell, CA
(408) 377-2988
tdsbay@cs.com

File Name : 2AM FINAL
Site Code : 00000002
Start Date : 1/22/2015
Page No : 2

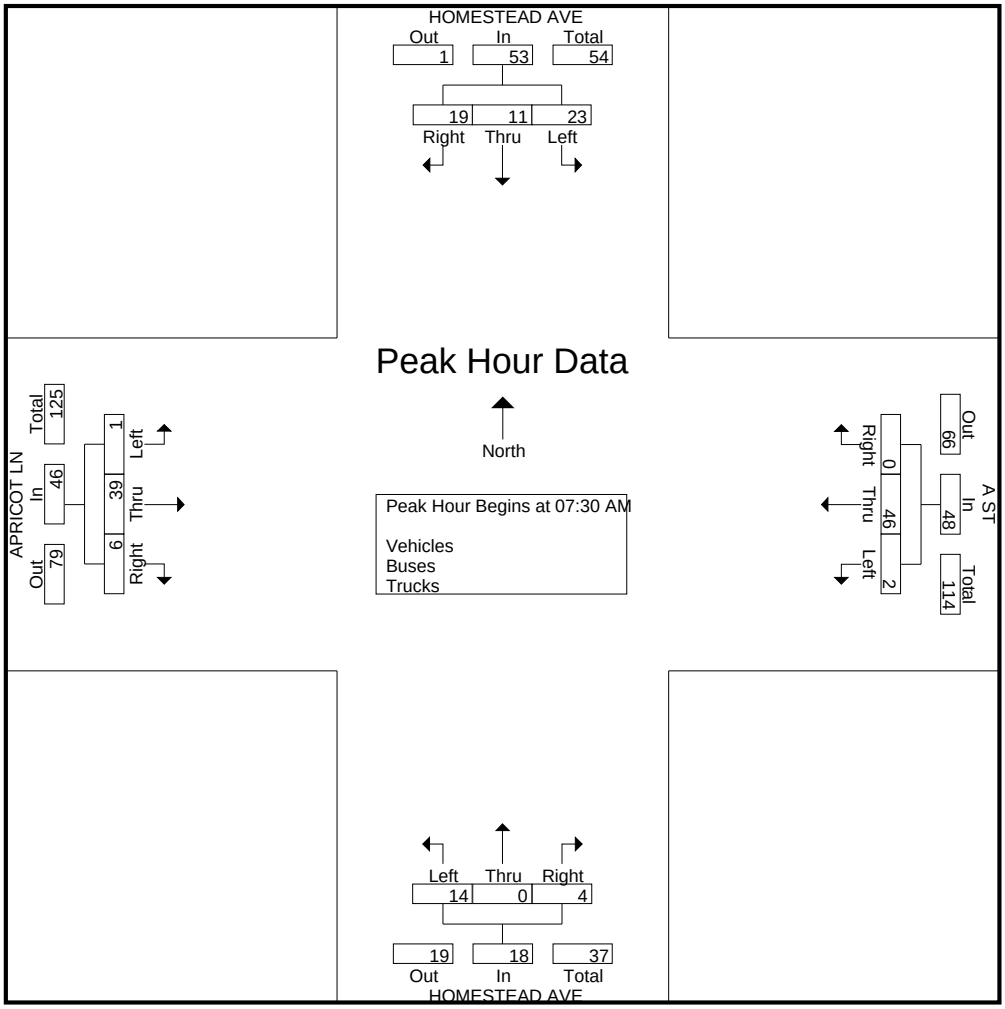

Traffic Data Service

Campbell, CA
(408) 377-2988
tdsbay@cs.com

File Name : 2PM FINAL
Site Code : 00000002
Start Date : 1/22/2015
Page No : 1

Groups Printed- Vehicles - Buses - Trucks

	HOMESTEAD AVE Southbound					A ST Westbound					HOMESTEAD AVE Northbound					APRICOT LN Eastbound					
Start Time	Right	Thru	Left	Peds	App. Total	Right	Thru	Left	Peds	App. Total	Right	Thru	Left	Peds	App. Total	Right	Thru	Left	Peds	App. Total	Int. Total
04:00 PM	2	3	4	4	13	0	8	0	1	9	0	0	0	0	0	0	7	0	1	8	30
04:15 PM	8	4	15	10	37	0	6	0	0	6	1	0	1	0	2	1	10	0	1	12	57
04:30 PM	5	2	1	3	11	0	2	1	0	3	1	0	2	0	3	2	3	0	2	7	24
04:45 PM	2	1	3	0	6	0	2	0	0	2	0	0	1	0	1	1	3	0	1	5	14
Total	17	10	23	17	67	0	18	1	1	20	2	0	4	0	6	4	23	0	5	32	125
05:00 PM	1	3	2	3	9	1	2	2	0	5	1	0	3	0	4	3	6	0	0	9	27
05:15 PM	0	0	0	0	0	0	8	1	0	9	1	0	2	0	3	1	8	0	0	9	21
05:30 PM	1	0	0	0	1	0	3	0	0	3	1	0	2	0	3	5	4	0	0	9	16
05:45 PM	1	0	0	0	1	0	3	0	0	3	0	0	2	0	2	1	5	1	0	7	13
Total	3	3	2	3	11	1	16	3	0	20	3	0	9	0	12	10	23	1	0	34	77
Grand Total	20	13	25	20	78	1	34	4	1	40	5	0	13	0	18	14	46	1	5	66	202
Apprch %	25.6	16.7	32.1	25.6		2.5	85	10	2.5		27.8	0	72.2	0		21.2	69.7	1.5	7.6		
Total %	9.9	6.4	12.4	9.9	38.6	0.5	16.8	2	0.5	19.8	2.5	0	6.4	0	8.9	6.9	22.8	0.5	2.5	32.7	
Vehicles	20	13	25	20	78	1	34	4	1	40	5	0	13	0	18	14	46	1	5	66	202
% Vehicles	100	100	100	100	100	100	100	100	100	100	100	0	100	0	100	100	100	100	100	100	100
Buses	0	0	0	0	0	0	0	0	0	0	0	0	0	0	0	0	0	0	0	0	0
% Buses	0	0	0	0	0	0	0	0	0	0	0	0	0	0	0	0	0	0	0	0	0
Trucks	0	0	0	0	0	0	0	0	0	0	0	0	0	0	0	0	0	0	0	0	0
% Trucks	0	0	0	0	0	0	0	0	0	0	0	0	0	0	0	0	0	0	0	0	0

	HOMESTEAD AVE Southbound				A ST Westbound				HOMESTEAD AVE Northbound				APRICOT LN Eastbound				
Start Time	Right	Thru	Left	App. Total	Right	Thru	Left	App. Total	Right	Thru	Left	App. Total	Right	Thru	Left	App. Total	Int. Total
Peak Hour Analysis From 04:00 PM to 05:45 PM - Peak 1 of 1																	
Peak Hour for Entire Intersection Begins at 04:00 PM																	
04:00 PM	2	3	4	9	0	**8**	0	**8**	0	0	0	0	0	7	0	7	24
04:15 PM	**8**	**4**	**15**	**27**	0	6	0	6	**1**	0	1	2	1	**10**	0	**11**	**46**
04:30 PM	5	2	1	8	0	2	**1**	3	1	0	**2**	**3**	**2**	3	0	5	19
04:45 PM	2	1	3	6	0	2	0	2	0	0	1	1	1	3	0	4	13
Total Volume	17	10	23	50	0	18	1	19	2	0	4	6	4	23	0	27	102
% App. Total	34	20	46		0	94.7	5.3		33.3	0	66.7		14.8	85.2	0		
PHF	.531	.625	.383	.463	.000	.563	.250	.594	.500	.000	.500	.500	.500	.575	.000	.614	.554

Traffic Data Service

Campbell, CA
(408) 377-2988
tdsbay@cs.com

File Name : 2PM FINAL
Site Code : 00000002
Start Date : 1/22/2015
Page No : 2

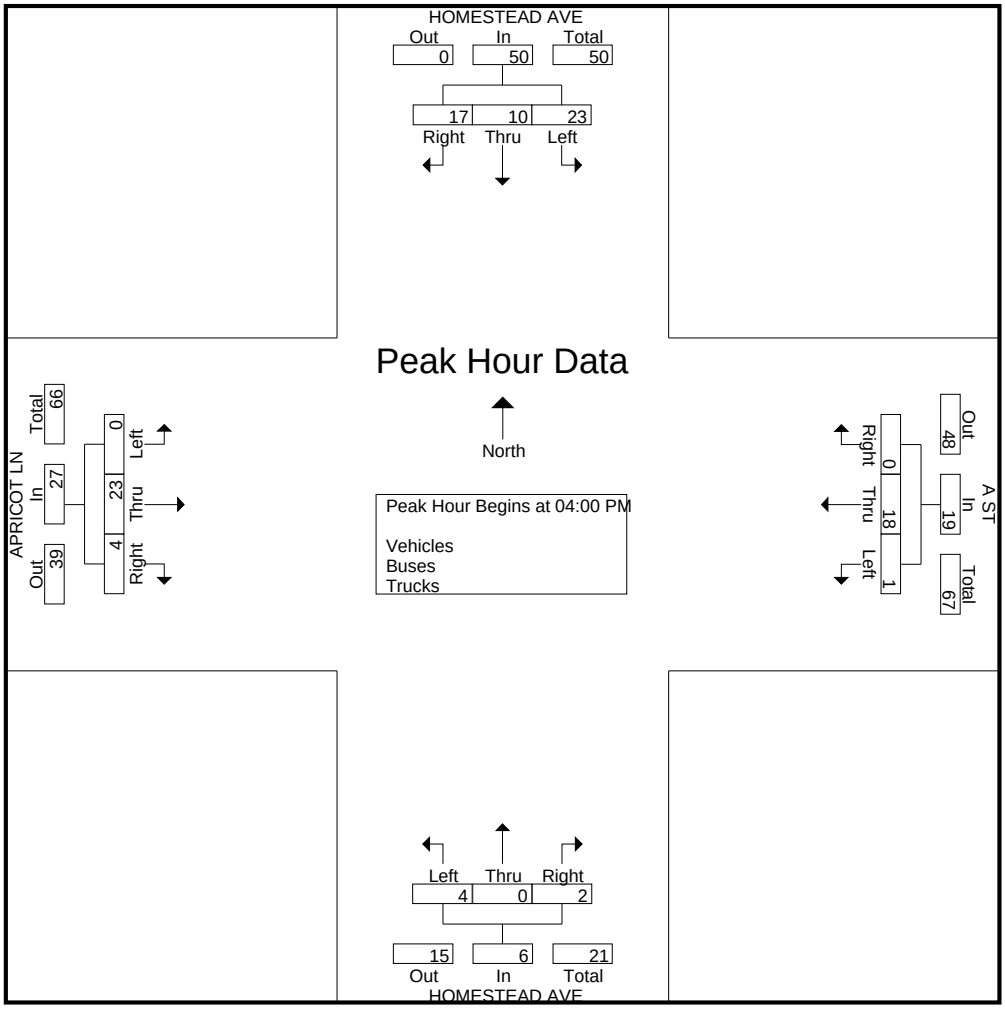

Traffic Data Service

Campbell, CA
(408) 377-2988
tdsbay@cs.com

File Name : 3AM FINAL
Site Code : 00000003
Start Date : 1/22/2015
Page No : 1

Groups Printed- Vehicles - Buses - Trucks

	POWELL ST Southbound					A ST Westbound					POWELL ST Northbound					A ST Eastbound					
Start Time	Right	Thru	Left	Peds	App. Total	Right	Thru	Left	Peds	App. Total	Right	Thru	Left	Peds	App. Total	Right	Thru	Left	Peds	App. Total	Int. Total
07:00 AM	3	8	0	1	12	0	1	2	4	7	0	9	0	0	9	2	3	2	0	7	35
07:15 AM	0	37	0	0	37	3	4	1	2	10	0	15	1	0	16	4	0	3	2	9	72
07:30 AM	1	23	0	3	27	4	7	1	0	12	3	43	2	0	48	5	4	3	1	13	100
07:45 AM	8	6	1	1	16	1	9	1	1	12	0	23	1	0	24	0	4	5	2	11	63
Total	12	74	1	5	92	8	21	5	7	41	3	90	4	0	97	11	11	13	5	40	270
08:00 AM	6	16	1	3	26	1	7	0	2	10	0	11	2	1	14	1	5	11	0	17	67
08:15 AM	4	16	2	2	24	1	1	0	0	2	1	15	0	0	16	3	22	9	3	37	79
08:30 AM	2	40	1	0	43	4	5	7	1	17	2	25	3	1	31	5	8	4	11	28	119
08:45 AM	1	21	2	0	24	4	9	3	0	16	2	34	2	0	38	2	0	3	0	5	83
Total	13	93	6	5	117	10	22	10	3	45	5	85	7	2	99	11	35	27	14	87	348
Grand Total	25	167	7	10	209	18	43	15	10	86	8	175	11	2	196	22	46	40	19	127	618
Apprch %	12	79.9	3.3	4.8		20.9	50	17.4	11.6		4.1	89.3	5.6	1		17.3	36.2	31.5	15		
Total %	4	27	1.1	1.6	33.8	2.9	7	2.4	1.6	13.9	1.3	28.3	1.8	0.3	31.7	3.6	7.4	6.5	3.1	20.6	
Vehicles	24	167	7	10	208	18	41	15	10	84	8	175	11	2	196	22	45	40	19	126	614
% Vehicles	96	100	100	100	99.5	100	95.3	100	100	97.7	100	100	100	100	100	100	97.8	100	100	99.2	99.4
Buses	0	0	0	0	0	0	2	0	0	2	0	0	0	0	0	0	0	0	0	0	2
% Buses	0	0	0	0	0	0	4.7	0	0	2.3	0	0	0	0	0	0	0	0	0	0	0.3
Trucks	1	0	0	0	1	0	0	0	0	0	0	0	0	0	0	0	1	0	0	1	2
% Trucks	4	0	0	0	0.5	0	0	0	0	0	0	0	0	0	0	0	2.2	0	0	0.8	0.3

	POWELL ST Southbound				A ST Westbound				POWELL ST Northbound				A ST Eastbound				
Start Time	Right	Thru	Left	App. Total	Right	Thru	Left	App. Total	Right	Thru	Left	App. Total	Right	Thru	Left	App. Total	Int. Total
Peak Hour Analysis From 07:00 AM to 08:45 AM - Peak 1 of 1																	
Peak Hour for Entire Intersection Begins at 08:00 AM																	
08:00 AM	**6**	16	1	23	1	7	0	8	0	11	2	13	1	5	**11**	17	61
08:15 AM	4	16	**2**	22	1	1	0	2	1	15	0	16	3	**22**	9	**34**	74
08:30 AM	2	**40**	1	**43**	**4**	5	**7**	**16**	**2**	25	**3**	30	**5**	8	4	17	**106**
08:45 AM	1	21	2	24	4	**9**	3	16	2	**34**	2	**38**	2	0	3	5	83
Total Volume	13	93	6	112	10	22	10	42	5	85	7	97	11	35	27	73	324
% App. Total	11.6	83	5.4		23.8	52.4	23.8		5.2	87.6	7.2		15.1	47.9	37		
PHF	.542	.581	.750	.651	.625	.611	.357	.656	.625	.625	.583	.638	.550	.398	.614	.537	.764

Traffic Data Service

Campbell, CA
(408) 377-2988
tdsbay@cs.com

File Name : 3AM FINAL
Site Code : 00000003
Start Date : 1/22/2015
Page No : 2

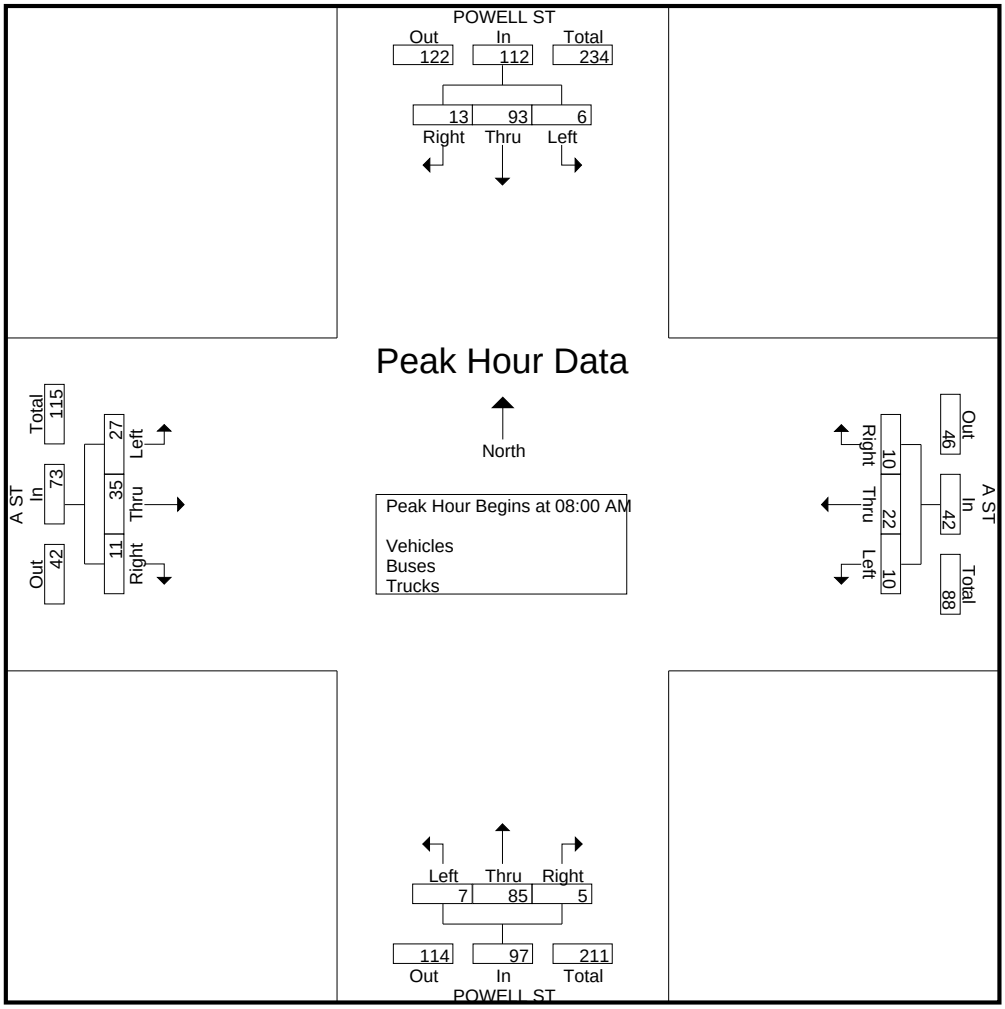

Traffic Data Service

Campbell, CA
(408) 377-2988
tdsbay@cs.com

File Name : 3PM FINAL
Site Code : 00000003
Start Date : 1/22/2015
Page No : 1

Groups Printed- Vehicles - Buses - Trucks

	POWELL ST Southbound					A ST Westbound					POWELL ST Northbound					A ST Eastbound					
Start Time	Right	Thru	Left	Peds	App. Total	Right	Thru	Left	Peds	App. Total	Right	Thru	Left	Peds	App. Total	Right	Thru	Left	Peds	App. Total	Int. Total
04:00 PM	5	18	1	0	24	2	2	0	0	4	0	14	1	0	15	4	5	3	0	12	55
04:15 PM	1	27	1	3	32	2	5	1	0	8	0	14	1	0	15	2	12	10	0	24	79
04:30 PM	0	20	4	8	32	1	3	0	2	6	0	18	1	0	19	0	3	4	0	7	64
04:45 PM	3	17	1	3	24	0	1	0	1	2	0	15	0	0	15	1	6	1	0	8	49
Total	9	82	7	14	112	5	11	1	3	20	0	61	3	0	64	7	26	18	0	51	247
05:00 PM	5	18	2	0	25	0	4	0	1	5	1	15	0	1	17	2	4	4	0	10	57
05:15 PM	4	19	2	0	25	1	3	0	0	4	1	18	0	0	19	0	6	1	0	7	55
05:30 PM	1	20	2	0	23	1	2	0	3	6	2	24	0	0	26	4	3	2	0	9	64
05:45 PM	1	28	1	0	30	3	2	0	2	7	2	18	2	0	22	1	6	1	0	8	67
Total	11	85	7	0	103	5	11	0	6	22	6	75	2	1	84	7	19	8	0	34	243
Grand Total	20	167	14	14	215	10	22	1	9	42	6	136	5	1	148	14	45	26	0	85	490
Apprch %	9.3	77.7	6.5	6.5		23.8	52.4	2.4	21.4		4.1	91.9	3.4	0.7		16.5	52.9	30.6	0		
Total %	4.1	34.1	2.9	2.9	43.9	2	4.5	0.2	1.8	8.6	1.2	27.8	1	0.2	30.2	2.9	9.2	5.3	0	17.3	
Vehicles	20	166	14	14	214	10	22	1	9	42	6	134	5	1	146	14	45	26	0	85	487
% Vehicles	100	99.4	100	100	99.5	100	100	100	100	100	100	98.5	100	100	98.6	100	100	100	0	100	99.4
Buses	0	0	0	0	0	0	0	0	0	0	0	0	0	0	0	0	0	0	0	0	0
% Buses	0	0	0	0	0	0	0	0	0	0	0	0	0	0	0	0	0	0	0	0	0
Trucks	0	1	0	0	1	0	0	0	0	0	0	2	0	0	2	0	0	0	0	0	3
% Trucks	0	0.6	0	0	0.5	0	0	0	0	0	0	1.5	0	0	1.4	0	0	0	0	0	0.6

	POWELL ST Southbound				A ST Westbound				POWELL ST Northbound				A ST Eastbound				
Start Time	Right	Thru	Left	App. Total	Right	Thru	Left	App. Total	Right	Thru	Left	App. Total	Right	Thru	Left	App. Total	Int. Total
Peak Hour Analysis From 04:00 PM to 05:45 PM - Peak 1 of 1																	
Peak Hour for Entire Intersection Begins at 05:00 PM																	
05:00 PM	**5**	18	**2**	25	0	**4**	0	4	1	15	0	16	2	4	**4**	**10**	55
05:15 PM	4	19	2	25	1	3	0	4	1	18	0	19	0	**6**	1	7	55
05:30 PM	1	20	2	23	1	2	0	3	**2**	**24**	0	**26**	**4**	3	2	9	61
05:45 PM	1	**28**	1	**30**	**3**	2	0	**5**	2	18	**2**	22	1	6	1	8	**65**
Total Volume	11	85	7	103	5	11	0	16	6	75	2	83	7	19	8	34	236
% App. Total	10.7	82.5	6.8		31.2	68.8	0		7.2	90.4	2.4		20.6	55.9	23.5		
PHF	.550	.759	.875	.858	.417	.688	.000	.800	.750	.781	.250	.798	.438	.792	.500	.850	.908

Traffic Data Service

Campbell, CA
(408) 377-2988
tdsbay@cs.com

File Name : 3PM FINAL
Site Code : 00000003
Start Date : 1/22/2015
Page No : 2

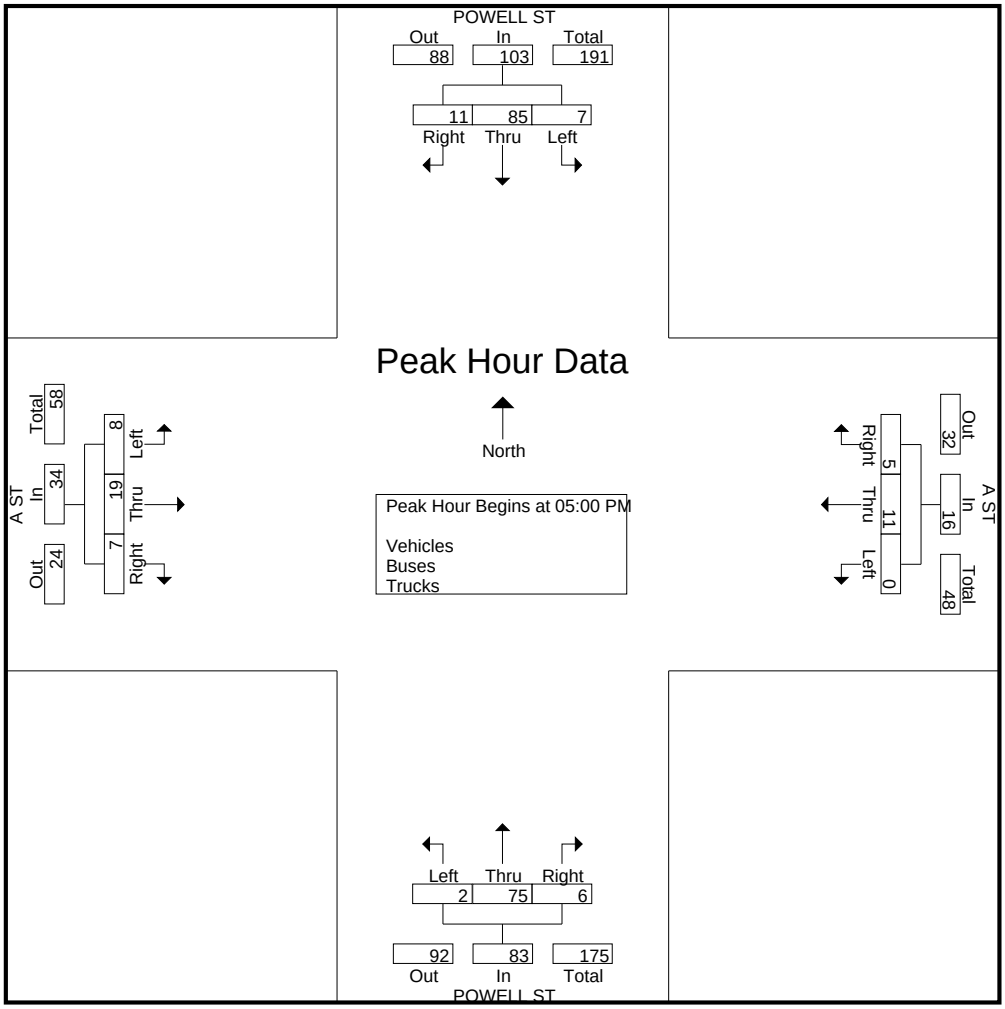

Hatch Mott MacDonald

1300-B First St.
Gilroy, California 95020

Site Code: VALI WY
Station ID:

Latitude: 0' 0.0000 South

Start	15-Jan-15	WB		EB		Combined		16-Jan	WB		EB		Combined	
Time	Thu	A.M.	P.M.	A.M.	P.M.	A.M.	P.M.	Fri	A.M.	P.M.	A.M.	P.M.	A.M.	P.M.
12:00		*	*	*	*	*	*		0	1	0	1	0	2
12:15		*	*	*	*	*	*		0	3	0	3	0	6
12:30		*	*	*	*	*	*		0	2	0	3	0	5
12:45		*	*	*	*	*	*		0	2	0	1	0	3
01:00		*	*	*	*	*	*		0	0	0	1	0	1
01:15		*	*	*	*	*	*		0	3	0	0	0	3
01:30		*	*	*	*	*	*		0	0	0	2	0	2
01:45		*	*	*	*	*	*		0	0	1	3	1	3
02:00		*	*	*	*	*	*		0	1	0	1	0	2
02:15		*	*	*	*	*	*		0	2	0	2	0	4
02:30		*	*	*	*	*	*		0	0	0	2	0	2
02:45		*	*	*	*	*	*		0	2	0	4	0	6
03:00		*	*	*	*	*	*		1	4	1	1	2	5
03:15		*	*	*	*	*	*		0	0	0	1	0	1
03:30		*	*	*	*	*	*		0	3	0	0	0	3
03:45		*	*	*	*	*	*		0	3	0	1	0	4
04:00		*	*	*	*	*	*		0	2	0	4	0	6
04:15		*	*	*	*	*	*		0	3	0	7	0	10
04:30		*	*	*	*	*	*		1	1	2	2	3	3
04:45		*	0	*	0	*	0		0	1	0	2	0	3
05:00		*	12	*	9	*	21		0	4	3	6	3	10
05:15		*	0	*	3	*	3		0	2	3	4	3	6
05:30		*	4	*	4	*	8		1	4	4	5	5	9
05:45		*	5	*	11	*	16		0	5	2	3	2	8
06:00		*	4	*	3	*	7		0	3	1	0	1	3
06:15		*	0	*	2	*	2		0	1	2	1	2	2
06:30		*	2	*	1	*	3		0	2	3	1	3	3
06:45		*	4	*	1	*	5		0	4	3	0	3	4
07:00		*	2	*	5	*	7		0	4	1	1	1	5
07:15		*	3	*	2	*	5		0	0	5	0	5	0
07:30		*	4	*	1	*	5		2	5	6	4	8	9
07:45		*	1	*	1	*	2		3	3	4	5	7	8
08:00		*	1	*	0	*	1		3	1	3	0	6	1
08:15		*	2	*	2	*	4		1	2	3	1	4	3
08:30		*	3	*	0	*	3		2	1	7	1	9	2
08:45		*	3	*	3	*	6		1	2	3	2	4	4
09:00		*	5	*	3	*	8		0	2	0	0	0	2
09:15		*	3	*	0	*	3		3	4	0	0	3	4
09:30		*	1	*	1	*	2		1	2	1	1	2	3
09:45		*	3	*	0	*	3		0	0	1	0	1	0
10:00		*	0	*	0	*	0		2	2	4	1	6	3
10:15		*	0	*	0	*	0		1	0	1	0	2	0
10:30		*	0	*	1	*	1		0	2	1	0	1	2
10:45		*	2	*	0	*	2		0	0	2	0	2	0
11:00		*	0	*	1	*	1		3	1	0	0	3	1
11:15		*	1	*	0	*	1		3	1	3	0	6	1
11:30		*	1	*	0	*	1		0	3	2	0	2	3
11:45		*	0	*	0	*	0		2	0	2	1	4	1
Total		0	66	0	54	0	120		30	93	74	78	104	171
Day Total		66		54		120			123		152		275	
% Total		0.0%	55.0%	0.0%	45.0%				10.9%	33.8%	26.9%	28.4%		
Peak	-	-	05:00	-	05:00	-	05:00	-	07:30	05:00	07:15	05:00	07:15	05:00
Vol.	-	-	21	-	27	-	48	-	9	15	18	18	26	33
P.H.F.			0.438		0.614		0.571		0.750	0.750	0.750	0.750	0.813	0.825

Hatch Mott MacDonald

1300-B First St.
Gilroy, California 95020

Site Code: VALI WY
Station ID:

Latitude: 0' 0.0000 South

Start Time	17-Jan-15 Sat	WB A.M.	WB P.M.	EB A.M.	EB P.M.	Combined A.M.	Combined P.M.	18-Jan Sun	WB A.M.	WB P.M.	EB A.M.	EB P.M.	Combined A.M.	Combined P.M.
12:00		0	1	0	3	0	4		1	1	1	0	2	1
12:15		0	1	0	3	0	4		0	1	0	2	0	3
12:30		2	4	1	0	3	4		0	1	0	3	0	4
12:45		1	1	2	4	3	5		2	0	0	4	2	4
01:00		0	1	1	3	1	4		0	0	0	2	0	2
01:15		0	2	0	4	0	6		0	2	0	2	0	4
01:30		0	1	1	1	1	2		0	2	0	3	0	5
01:45		1	1	0	2	1	3		1	2	0	0	1	2
02:00		0	3	0	3	0	6		0	0	1	0	1	0
02:15		0	0	0	4	0	4		0	2	1	2	1	4
02:30		0	1	0	0	0	1		0	2	1	2	1	4
02:45		1	2	0	0	1	2		0	1	0	0	0	1
03:00		0	0	0	2	0	2		0	0	0	2	0	2
03:15		0	3	0	3	0	6		0	0	0	0	0	0
03:30		0	2	0	1	0	3		0	1	1	2	1	3
03:45		1	2	1	1	2	3		0	5	0	3	0	8
04:00		0	3	0	4	0	7		0	2	0	4	0	6
04:15		0	2	0	4	0	6		1	4	1	4	2	8
04:30		1	1	0	5	1	6		0	3	0	4	0	7
04:45		0	2	0	5	0	7		3	2	5	1	8	3
05:00		0	1	0	0	0	1		0	0	1	1	1	1
05:15		1	2	2	4	3	6		0	1	2	1	2	2
05:30		1	4	2	0	3	4		0	2	1	2	1	4
05:45		0	2	0	2	0	4		0	0	2	1	2	1
06:00		1	1	1	2	2	3		1	2	0	0	1	2
06:15		0	3	0	2	0	5		0	3	1	2	1	5
06:30		0	4	0	2	0	6		0	0	0	1	0	1
06:45		1	2	0	2	1	4		0	4	2	4	2	8
07:00		0	3	2	0	2	3		0	1	2	3	2	4
07:15		1	1	2	0	3	1		1	0	0	7	1	7
07:30		0	3	3	3	3	6		0	0	3	0	3	0
07:45		0	1	3	1	3	2		0	1	0	1	0	2
08:00		0	4	0	1	0	5		2	2	2	3	4	5
08:15		0	2	2	4	2	6		2	4	1	2	3	6
08:30		2	1	1	2	3	3		0	0	0	1	0	1
08:45		1	0	1	3	2	3		1	2	0	1	1	3
09:00		0	2	8	2	8	4		0	1	1	0	1	1
09:15		3	2	1	0	4	2		1	2	4	0	5	2
09:30		1	2	4	0	5	2		1	0	0	0	1	0
09:45		1	0	2	2	3	2		3	1	1	1	4	2
10:00		1	0	1	2	2	2		3	1	5	1	8	2
10:15		0	0	0	1	0	1		1	1	2	1	3	2
10:30		4	0	3	3	7	3		1	1	1	0	2	1
10:45		2	2	3	3	5	5		1	0	2	0	3	0
11:00		0	3	0	3	0	6		1	1	4	0	5	1
11:15		4	3	1	5	5	8		0	1	2	0	2	1
11:30		4	0	4	0	8	0		1	1	1	2	2	3
11:45		1	2	0	1	1	3		2	0	0	0	2	0
Total		36	83	52	102	88	185		30	63	51	75	81	138
Day Total		119		154		273			93		126		219	
% Total		13.2%	30.4%	19.0%	37.4%				13.7%	28.8%	23.3%	34.2%		
Peak	-	10:30	06:15	09:00	04:00	09:00	04:00	-	09:15	03:45	09:15	03:45	09:15	03:45
Vol.	-	10	12	15	18	20	26	-	8	14	10	15	18	29
P.H.F.		0.625	0.750	0.469	0.900	0.625	0.929		0.667	0.700	0.500	0.938	0.563	0.906

Hatch Mott MacDonald

1300-B First St.
Gilroy, California 95020

Site Code: VALI WY
Station ID:

Latitude: 0' 0.0000 South

Start Time	19-Jan-15 Mon	WB A.M.	WB P.M.	EB A.M.	EB P.M.	Combined A.M.	Combined P.M.	20-Jan Tue	WB A.M.	WB P.M.	EB A.M.	EB P.M.	Combined A.M.	Combined P.M.
12:00		1	2	0	1	1	3		1	1	0	3	1	4
12:15		0	1	0	1	0	2		0	1	0	4	0	5
12:30		0	0	0	4	0	4		0	2	0	1	0	3
12:45		0	1	0	2	0	3		0	3	0	0	0	3
01:00		0	1	0	0	0	1		0	1	0	2	0	3
01:15		1	1	0	0	1	1		0	1	0	3	0	4
01:30		0	1	0	4	0	5		0	1	0	4	0	5
01:45		0	1	0	0	0	1		0	2	0	2	0	4
02:00		0	0	0	0	0	0		0	1	0	1	0	2
02:15		0	2	0	1	0	3		0	3	0	1	0	4
02:30		0	4	0	6	0	10		0	0	0	3	0	3
02:45		1	2	0	2	1	4		0	1	0	1	0	2
03:00		0	3	0	1	0	4		0	5	0	5	0	10
03:15		0	0	0	2	0	2		0	2	0	12	0	14
03:30		0	2	0	3	0	5		0	4	0	3	0	7
03:45		1	6	1	6	2	12		1	3	1	1	2	4
04:00		0	2	0	3	0	5		0	5	0	4	0	9
04:15		1	2	1	1	2	3		0	7	0	7	0	14
04:30		0	5	0	3	0	8		0	2	1	0	1	2
04:45		0	8	0	4	0	12		0	3	1	5	1	8
05:00		1	0	2	1	3	1		0	2	3	7	3	9
05:15		1	2	1	0	2	2		0	2	5	2	5	4
05:30		3	1	2	2	5	3		0	2	1	7	1	9
05:45		0	4	6	1	6	5		0	3	2	7	2	10
06:00		0	2	3	0	3	2		0	0	5	6	5	6
06:15		0	4	1	3	1	7		0	3	3	2	3	5
06:30		0	4	3	3	3	7		1	1	0	5	1	6
06:45		0	3	3	0	3	3		2	3	5	1	7	4
07:00		0	1	0	1	0	2		2	0	5	1	7	1
07:15		0	1	0	2	0	3		0	1	5	0	5	1
07:30		0	2	2	1	2	3		0	2	3	1	3	3
07:45		0	2	2	2	2	4		0	4	3	1	3	5
08:00		0	1	1	1	1	2		2	2	2	1	4	3
08:15		0	0	0	4	0	4		0	1	4	1	4	2
08:30		0	1	1	0	1	1		4	1	4	2	8	3
08:45		0	1	2	0	2	1		5	3	3	2	8	5
09:00		0	0	1	0	1	0		0	2	1	1	1	3
09:15		0	0	0	0	0	0		1	0	1	0	2	0
09:30		2	0	4	0	6	0		0	0	0	0	0	0
09:45		1	1	0	0	1	1		0	1	2	0	2	1
10:00		1	0	1	0	2	0		1	1	2	0	3	1
10:15		1	0	1	0	2	0		3	1	1	0	4	1
10:30		0	1	3	0	3	1		0	1	2	0	2	1
10:45		0	0	2	0	2	0		0	1	0	1	0	2
11:00		0	0	1	0	1	0		2	2	0	2	2	4
11:15		2	1	0	0	2	1		0	0	1	3	1	3
11:30		1	0	2	0	3	0		1	0	2	1	3	1
11:45		1	1	0	0	1	1		1	0	1	0	2	0
Total		19	77	46	65	65	142		27	87	69	116	96	203
Day Total		96		111		207			114		185		299	
% Total		9.2%	37.2%	22.2%	31.4%				9.0%	29.1%	23.1%	38.8%		
Peak	-	04:45	04:00	05:45	03:15	05:00	03:45	-	08:00	03:30	06:45	05:00	08:00	03:00
Vol.	-	5	17	13	14	16	28	-	11	19	18	23	24	35
P.H.F.		0.417	0.531	0.542	0.583	0.667	0.583		0.550	0.679	0.900	0.479	0.750	0.625

Hatch Mott MacDonald

1300-B First St.
Gilroy, California 95020

Site Code: VALI WY
Station ID:

Latitude: 0' 0.0000 South

Start Time	23-Jan-15 Fri	WB A.M.	WB P.M.	EB A.M.	EB P.M.	Combined A.M.	Combined P.M.	24-Jan Sat	WB A.M.	WB P.M.	EB A.M.	EB P.M.	Combined A.M.	Combined P.M.
12:00		0	1	0	0	0	1		2	2	0	6	2	8
12:15		1	3	0	1	1	4		1	0	1	2	2	2
12:30		0	2	0	2	0	4		0	1	0	1	0	2
12:45		0	0	1	3	1	3		0	0	0	1	0	1
01:00		1	2	0	0	1	2		0	1	0	1	0	2
01:15		0	2	0	2	0	4		2	4	0	3	2	7
01:30		0	0	0	2	0	2		0	0	0	2	0	2
01:45		0	0	0	8	0	8		0	1	0	1	0	2
02:00		0	1	0	1	0	2		0	3	0	2	0	5
02:15		0	1	0	2	0	3		0	2	0	1	0	3
02:30		0	1	0	1	0	2		0	1	0	2	0	3
02:45		0	1	0	5	0	6		0	2	0	2	0	4
03:00		1	6	1	4	2	10		0	2	1	4	1	6
03:15		1	3	1	6	2	9		0	4	0	2	0	6
03:30		0	1	1	3	1	4		0	1	0	5	0	6
03:45		0	2	0	3	0	5		0	2	0	0	0	2
04:00		0	1	0	7	0	8		1	4	1	0	2	4
04:15		0	1	0	6	0	7		0	1	0	3	0	4
04:30		1	3	0	2	1	5		0	0	0	1	0	1
04:45		0	0	1	2	1	2		0	2	0	2	0	4
05:00		0	3	3	0	3	3		0	5	0	3	0	8
05:15		0	1	1	6	1	7		0	0	0	5	0	5
05:30		0	6	1	3	1	9		0	1	2	3	2	4
05:45		0	4	6	0	6	4		0	2	1	0	1	2
06:00		1	3	1	3	2	6		0	2	1	1	1	3
06:15		1	5	2	3	3	8		0	0	0	4	0	4
06:30		0	3	1	10	1	13		0	4	1	2	1	6
06:45		0	2	0	3	0	5		0	1	0	0	0	1
07:00		0	2	1	0	1	2		1	2	0	5	1	7
07:15		1	1	3	3	4	4		0	5	0	1	0	6
07:30		0	1	2	1	2	2		0	3	0	1	0	4
07:45		0	0	5	3	5	3		1	1	3	2	4	3
08:00		2	3	3	0	5	3		0	2	6	3	6	5
08:15		1	4	2	1	3	5		1	1	1	2	2	3
08:30		1	1	9	4	10	5		0	2	3	1	3	3
08:45		0	0	3	1	3	1		1	0	4	3	5	3
09:00		0	0	0	1	0	1		5	0	3	1	8	1
09:15		1	1	0	1	1	2		2	2	1	1	3	3
09:30		3	1	3	0	6	1		1	1	3	1	4	2
09:45		4	0	4	0	8	0		0	1	1	0	1	1
10:00		0	2	2	0	2	2		0	2	3	2	3	4
10:15		0	0	1	0	1	0		0	1	4	0	4	1
10:30		0	1	1	1	1	2		1	3	3	2	4	5
10:45		1	0	3	1	4	1		3	0	2	1	5	1
11:00		0	0	1	0	1	0		0	1	2	0	2	1
11:15		1	0	1	0	2	0		3	2	1	1	4	3
11:30		1	2	1	2	2	4		0	2	3	3	3	5
11:45		2	2	0	0	2	2		5	2	4	1	9	3
Total		25	79	65	107	90	186		30	81	55	90	85	171
Day Total		104		172		276			111		145		256	
% Total		9.1%	28.6%	23.6%	38.8%				11.7%	31.6%	21.5%	35.2%		
Peak	-	09:00	05:30	07:45	03:15	07:45	06:00	-	08:45	06:30	08:00	02:45	08:45	02:45
Vol.	-	8	18	19	19	23	32	-	9	12	14	13	20	22
P.H.F.		0.500	0.750	0.528	0.679	0.575	0.615		0.450	0.600	0.583	0.650	0.625	0.917

Hatch Mott MacDonald

1300-B First St.
Gilroy, California 95020

Site Code: VALI WY
Station ID:

Latitude: 0' 0.0000 South

Start Time	25-Jan-15 Sun	WB A.M.	WB P.M.	EB A.M.	EB P.M.	Combined A.M.	Combined P.M.	26-Jan Mon	WB A.M.	WB P.M.	EB A.M.	EB P.M.	Combined A.M.	Combined P.M.
12:00		1	2	0	5	1	7		*	*	*	*	*	*
12:15		0	0	0	2	0	2		*	*	*	*	*	*
12:30		0	2	0	5	0	7		*	*	*	*	*	*
12:45		1	2	0	1	1	3		*	*	*	*	*	*
01:00		0	0	0	4	0	4		*	*	*	*	*	*
01:15		0	0	0	7	0	7		*	*	*	*	*	*
01:30		1	0	0	1	1	1		*	*	*	*	*	*
01:45		0	2	0	1	0	3		*	*	*	*	*	*
02:00		0	1	0	0	0	1		*	*	*	*	*	*
02:15		0	0	1	0	1	0		*	*	*	*	*	*
02:30		0	3	0	4	0	7		*	*	*	*	*	*
02:45		0	1	0	4	0	5		*	*	*	*	*	*
03:00		1	1	0	1	1	2		*	*	*	*	*	*
03:15		0	3	0	4	0	7		*	*	*	*	*	*
03:30		0	2	0	1	0	3		*	*	*	*	*	*
03:45		0	1	0	0	0	1		*	*	*	*	*	*
04:00		0	4	0	2	0	6		*	*	*	*	*	*
04:15		0	1	0	1	0	2		*	*	*	*	*	*
04:30		0	2	0	2	0	4		*	*	*	*	*	*
04:45		1	2	1	2	2	4		*	*	*	*	*	*
05:00		0	3	0	5	0	8		*	*	*	*	*	*
05:15		0	*	0	*	0	*		*	*	*	*	*	*
05:30		0	*	0	*	0	*		*	*	*	*	*	*
05:45		0	*	0	*	0	*		*	*	*	*	*	*
06:00		0	*	0	*	0	*		*	*	*	*	*	*
06:15		0	*	1	*	1	*		*	*	*	*	*	*
06:30		0	*	2	*	2	*		*	*	*	*	*	*
06:45		0	*	0	*	0	*		*	*	*	*	*	*
07:00		0	*	1	*	1	*		*	*	*	*	*	*
07:15		0	*	0	*	0	*		*	*	*	*	*	*
07:30		0	*	1	*	1	*		*	*	*	*	*	*
07:45		2	*	0	*	2	*		*	*	*	*	*	*
08:00		0	*	1	*	1	*		*	*	*	*	*	*
08:15		0	*	0	*	0	*		*	*	*	*	*	*
08:30		0	*	2	*	2	*		*	*	*	*	*	*
08:45		1	*	2	*	3	*		*	*	*	*	*	*
09:00		0	*	0	*	0	*		*	*	*	*	*	*
09:15		0	*	5	*	5	*		*	*	*	*	*	*
09:30		1	*	2	*	3	*		*	*	*	*	*	*
09:45		0	*	4	*	4	*		*	*	*	*	*	*
10:00		4	*	0	*	4	*		*	*	*	*	*	*
10:15		1	*	3	*	4	*		*	*	*	*	*	*
10:30		2	*	0	*	2	*		*	*	*	*	*	*
10:45		0	*	1	*	1	*		*	*	*	*	*	*
11:00		3	*	3	*	6	*		*	*	*	*	*	*
11:15		1	*	4	*	5	*		*	*	*	*	*	*
11:30		1	*	3	*	4	*		*	*	*	*	*	*
11:45		1	*	2	*	3	*		*	*	*	*	*	*
Total		22	32	39	52	61	84		0	0	0	0	0	0
Day Total		54		91		145			0		0		0	
% Total		15.2%	22.1%	26.9%	35.9%				0.0%	0.0%	0.0%	0.0%		
Peak	-	09:45	03:15	11:00	00:30	11:00	00:30	-	-	-	-	-	-	-
Vol.	-	7	10	12	17	18	21	-	-	-	-	-	-	-
P.H.F.		0.438	0.625	0.600	0.607	0.750	0.750							

ADT	ADT 258	AADT 258

Appendix C

Intersection Level of Service Calculations

Existing Conditions

Intersection	
Intersection Delay, s/veh	9
Intersection LOS	A

Movement	EBU	EBL	EBT	EBR	WBU	WBL	WBT	WBR	NBU	NBL	NBT	NBR
Vol, veh/h	0	29	12	4	0	5	9	63	0	5	155	26
Peak Hour Factor	0.92	0.83	0.83	0.83	0.92	0.83	0.83	0.83	0.92	0.83	0.83	0.83
Heavy Vehicles, %	2	12	12	12	2	4	4	4	2	3	3	3
Mvmt Flow	0	35	14	5	0	6	11	76	0	6	187	31
Number of Lanes	0	0	1	0	0	0	1	0	0	0	1	0

Approach	EB	WB	NB
Opposing Approach	WB	EB	SB
Opposing Lanes	1	1	1
Conflicting Approach Left	SB	NB	EB
Conflicting Lanes Left	1	1	1
Conflicting Approach Right	NB	SB	WB
Conflicting Lanes Right	1	1	1
HCM Control Delay	8.8	8.2	9.2
HCM LOS	A	A	A

Lane	NBLn1	EBLn1	WBLn1	SBLn1
Vol Left, %	3%	64%	6%	32%
Vol Thru, %	83%	27%	12%	63%
Vol Right, %	14%	9%	82%	5%
Sign Control	Stop	Stop	Stop	Stop
Traffic Vol by Lane	186	45	77	178
LT Vol	5	29	5	57
Through Vol	155	12	9	112
RT Vol	26	4	63	9
Lane Flow Rate	224	54	93	214
Geometry Grp	1	1	1	1
Degree of Util (X)	0.278	0.08	0.117	0.272
Departure Headway (Hd)	4.471	5.295	4.559	4.571
Convergence, Y/N	Yes	Yes	Yes	Yes
Cap	802	674	784	785
Service Time	2.504	3.342	2.603	2.606
HCM Lane V/C Ratio	0.279	0.08	0.119	0.273
HCM Control Delay	9.2	8.8	8.2	9.3
HCM Lane LOS	A	A	A	A
HCM 95th-tile Q	1.1	0.3	0.4	1.1

Intersection	
Intersection Delay, s/veh	
Intersection LOS	

Movement	SBU	SBL	SBT	SBR
Vol, veh/h	0	57	112	9
Peak Hour Factor	0.92	0.83	0.83	0.83
Heavy Vehicles, %	2	2	2	2
Mvmt Flow	0	69	135	11
Number of Lanes	0	0	1	0

Approach	SB
Opposing Approach	NB
Opposing Lanes	1
Conflicting Approach Left	WB
Conflicting Lanes Left	1
Conflicting Approach Right	EB
Conflicting Lanes Right	1
HCM Control Delay	9.3
HCM LOS	A

Lane

Intersection	
Int Delay, s/veh	7.7

Movement	EBL	EBT	EBR	WBL	WBT	WBR	NBL	NBT	NBR	SBL	SBT	SBR
Vol, veh/h	1	39	6	2	46	0	14	0	4	23	11	19
Conflicting Peds, #/hr	5	0	1	1	0	5	16	0	0	0	0	16
Sign Control	Stop	Stop	Stop	Stop	Stop	Stop	Free	Free	Free	Free	Free	Free
RT Channelized	-	-	None	-	-	None	-	-	None	-	-	None
Storage Length	-	-	-	-	-	-	-	-	-	-	-	-
Veh in Median Storage, #	-	0	-	-	0	-	-	0	-	-	0	-
Grade, %	-	0	-	-	0	-	-	0	-	-	0	-
Peak Hour Factor	67	67	67	67	67	67	67	67	67	67	67	67
Heavy Vehicles, %	2	2	2	2	2	2	2	2	2	2	2	2
Mvmt Flow	1	58	9	3	69	0	21	0	6	34	16	28

Major/Minor	Minor2			Minor1			Major1			Major2		
Conflicting Flow All	188	157	52	188	168	24	50	0	0	11	0	0
Stage 1	104	104	-	50	50	-	-	-	-	-	-	-
Stage 2	84	53	-	138	118	-	-	-	-	-	-	-
Critical Hdwy	7.12	6.52	6.22	7.12	6.52	6.22	4.12	-	-	4.12	-	-
Critical Hdwy Stg 1	6.12	5.52	-	6.12	5.52	-	-	-	-	-	-	-
Critical Hdwy Stg 2	6.12	5.52	-	6.12	5.52	-	-	-	-	-	-	-
Follow-up Hdwy	3.518	4.018	3.318	3.518	4.018	3.318	2.218	-	-	2.218	-	-
Pot Cap-1 Maneuver	772	735	1016	772	725	1052	1557	-	-	1608	-	-
Stage 1	902	809	-	963	853	-	-	-	-	-	-	-
Stage 2	924	851	-	865	798	-	-	-	-	-	-	-
Platoon blocked, %								-	-		-	-
Mov Cap-1 Maneuver	682	703	998	685	693	1034	1536	-	-	1587	-	-
Mov Cap-2 Maneuver	682	703	-	685	693	-	-	-	-	-	-	-
Stage 1	886	788	-	946	838	-	-	-	-	-	-	-
Stage 2	825	836	-	766	777	-	-	-	-	-	-	-

Approach	EB	WB	NB	SB
HCM Control Delay, s	10.4	10.8	5.7	3.2
HCM LOS	B	B		

Minor Lane/Major Mvmt	NBL	NBT	NBR	EBLn1	WBLn1	SBL	SBT	SBR
Capacity (veh/h)	1536	-	-	731	693	1587	-	-
HCM Lane V/C Ratio	0.014	-	-	0.094	0.103	0.022	-	-
HCM Control Delay (s)	7.4	0	-	10.4	10.8	7.3	0	-
HCM Lane LOS	A	A	-	B	B	A	A	-
HCM 95th %tile Q(veh)	0	-	-	0.3	0.3	0.1	-	-

Intersection	
Int Delay, s/veh	4.5

Movement	EBL	EBT	EBR	WBL	WBT	WBR	NBL	NBT	NBR	SBL	SBT	SBR
Vol, veh/h	27	35	11	10	22	10	7	85	5	6	93	13
Conflicting Peds, #/hr	3	0	14	14	0	3	5	0	2	2	0	5
Sign Control	Stop	Stop	Stop	Stop	Stop	Stop	Free	Free	Free	Free	Free	Free
RT Channelized	-	-	None	-	-	None	-	-	None	-	-	None
Storage Length	-	-	-	-	-	-	-	-	-	-	-	-
Veh in Median Storage, #	-	0	-	-	0	-	-	0	-	-	0	-
Grade, %	-	0	-	-	0	-	-	0	-	-	0	-
Peak Hour Factor	76	76	76	76	76	76	76	76	76	76	76	76
Heavy Vehicles, %	2	2	2	2	2	2	2	2	2	2	2	2
Mvmt Flow	36	46	14	13	29	13	9	112	7	8	122	17

Major/Minor	Minor2			Minor1			Major1			Major2		
Conflicting Flow All	330	312	150	339	317	134	153	0	0	132	0	0
Stage 1	161	161	-	148	148	-	-	-	-	-	-	-
Stage 2	169	151	-	191	169	-	-	-	-	-	-	-
Critical Hdwy	7.12	6.52	6.22	7.12	6.52	6.22	4.12	-	-	4.12	-	-
Critical Hdwy Stg 1	6.12	5.52	-	6.12	5.52	-	-	-	-	-	-	-
Critical Hdwy Stg 2	6.12	5.52	-	6.12	5.52	-	-	-	-	-	-	-
Follow-up Hdwy	3.518	4.018	3.318	3.518	4.018	3.318	2.218	-	-	2.218	-	-
Pot Cap-1 Maneuver	623	603	896	615	599	915	1428	-	-	1453	-	-
Stage 1	841	765	-	855	775	-	-	-	-	-	-	-
Stage 2	833	772	-	811	759	-	-	-	-	-	-	-
Platoon blocked, %								-	-		-	-
Mov Cap-1 Maneuver	575	581	882	554	578	901	1422	-	-	1447	-	-
Mov Cap-2 Maneuver	575	581	-	554	578	-	-	-	-	-	-	-
Stage 1	825	752	-	839	761	-	-	-	-	-	-	-
Stage 2	781	758	-	741	746	-	-	-	-	-	-	-

Approach	EB	WB	NB	SB
HCM Control Delay, s	12	11.3	0.5	0.4
HCM LOS	B	B		

Minor Lane/Major Mvmt	NBL	NBT	NBR	EBLn1	WBLn1	SBL	SBT	SBR
Capacity (veh/h)	1422	-	-	610	625	1447	-	-
HCM Lane V/C Ratio	0.006	-	-	0.157	0.088	0.005	-	-
HCM Control Delay (s)	7.5	0	-	12	11.3	7.5	0	-
HCM Lane LOS	A	A	-	B	B	A	A	-
HCM 95th %tile Q(veh)	0	-	-	0.6	0.3	0	-	-

Intersection	
Intersection Delay, s/veh	8.8
Intersection LOS	A

Movement	EBU	EBL	EBT	EBR	WBU	WBL	WBT	WBR	NBU	NBL	NBT	NBR
Vol, veh/h	0	17	2	5	0	3	3	35	0	4	145	7
Peak Hour Factor	0.92	0.91	0.91	0.91	0.92	0.91	0.91	0.91	0.92	0.91	0.91	0.91
Heavy Vehicles, %	2	2	2	2	2	2	2	2	2	2	2	2
Mvmt Flow	0	19	2	5	0	3	3	38	0	4	159	8
Number of Lanes	0	0	1	0	0	0	1	0	0	0	1	0

Approach	EB	WB	NB
Opposing Approach	WB	EB	SB
Opposing Lanes	1	1	1
Conflicting Approach Left	SB	NB	EB
Conflicting Lanes Left	1	1	1
Conflicting Approach Right	NB	SB	WB
Conflicting Lanes Right	1	1	1
HCM Control Delay	8.2	7.7	8.5
HCM LOS	A	A	A

Lane	NBLn1	EBLn1	WBLn1	SBLn1
Vol Left, %	3%	71%	7%	13%
Vol Thru, %	93%	8%	7%	77%
Vol Right, %	4%	21%	85%	9%
Sign Control	Stop	Stop	Stop	Stop
Traffic Vol by Lane	156	24	41	253
LT Vol	4	17	3	34
Through Vol	145	2	3	195
RT Vol	7	5	35	24
Lane Flow Rate	171	26	45	278
Geometry Grp	1	1	1	1
Degree of Util (X)	0.208	0.037	0.056	0.321
Departure Headway (Hd)	4.364	4.991	4.452	4.267
Convergence, Y/N	Yes	Yes	Yes	Yes
Cap	826	720	807	848
Service Time	2.374	3.005	2.465	2.267
HCM Lane V/C Ratio	0.207	0.036	0.056	0.328
HCM Control Delay	8.5	8.2	7.7	9.3
HCM Lane LOS	A	A	A	A
HCM 95th-tile Q	0.8	0.1	0.2	1.4

Intersection	
Intersection Delay, s/veh	
Intersection LOS	

Movement	SBU	SBL	SBT	SBR
Vol, veh/h	0	34	195	24
Peak Hour Factor	0.92	0.91	0.91	0.91
Heavy Vehicles, %	2	2	2	2
Mvmt Flow	0	37	214	26
Number of Lanes	0	0	1	0

Approach	SB
Opposing Approach	NB
Opposing Lanes	1
Conflicting Approach Left	WB
Conflicting Lanes Left	1
Conflicting Approach Right	EB
Conflicting Lanes Right	1
HCM Control Delay	9.3
HCM LOS	A

Lane

Intersection	
Int Delay, s/veh	6.5

Movement	EBL	EBT	EBR	WBL	WBT	WBR	NBL	NBT	NBR	SBL	SBT	SBR
Vol, veh/h	0	23	4	1	18	0	4	0	2	23	10	17
Conflicting Peds, #/hr	1	0	5	5	0	1	17	0	0	0	0	17
Sign Control	Stop	Stop	Stop	Stop	Stop	Stop	Free	Free	Free	Free	Free	Free
RT Channelized	-	-	None	-	-	None	-	-	None	-	-	None
Storage Length	-	-	-	-	-	-	-	-	-	-	-	-
Veh in Median Storage, #	-	0	-	-	0	-	-	0	-	-	0	-
Grade, %	-	0	-	-	0	-	-	0	-	-	0	-
Peak Hour Factor	67	67	67	67	67	67	67	67	67	67	67	67
Heavy Vehicles, %	2	2	2	2	2	2	2	2	2	2	2	2
Mvmt Flow	0	34	6	1	27	0	6	0	3	34	15	25

Major/Minor	Minor2			Minor1			Major1			Major2		
Conflicting Flow All	133	121	50	139	132	23	45	0	0	8	0	0
Stage 1	101	101	-	18	18	-	-	-	-	-	-	-
Stage 2	32	20	-	121	114	-	-	-	-	-	-	-
Critical Hdwy	7.12	6.52	6.22	7.12	6.52	6.22	4.12	-	-	4.12	-	-
Critical Hdwy Stg 1	6.12	5.52	-	6.12	5.52	-	-	-	-	-	-	-
Critical Hdwy Stg 2	6.12	5.52	-	6.12	5.52	-	-	-	-	-	-	-
Follow-up Hdwy	3.518	4.018	3.318	3.518	4.018	3.318	2.218	-	-	2.218	-	-
Pot Cap-1 Maneuver	839	769	1018	831	759	1054	1563	-	-	1612	-	-
Stage 1	905	811	-	1001	880	-	-	-	-	-	-	-
Stage 2	984	879	-	883	801	-	-	-	-	-	-	-
Platoon blocked, %								-	-		-	-
Mov Cap-1 Maneuver	785	743	999	767	733	1035	1541	-	-	1589	-	-
Mov Cap-2 Maneuver	785	743	-	767	733	-	-	-	-	-	-	-
Stage 1	898	790	-	993	873	-	-	-	-	-	-	-
Stage 2	936	872	-	809	780	-	-	-	-	-	-	-

Approach	EB	WB	NB	SB
HCM Control Delay, s	9.9	10.1	4.9	3.4
HCM LOS	A	B		

Minor Lane/Major Mvmt	NBL	NBT	NBR	EBLn1	WBLn1	SBL	SBT	SBR
Capacity (veh/h)	1541	-	-	772	735	1589	-	-
HCM Lane V/C Ratio	0.004	-	-	0.052	0.039	0.022	-	-
HCM Control Delay (s)	7.3	0	-	9.9	10.1	7.3	0	-
HCM Lane LOS	A	A	-	A	B	A	A	-
HCM 95th %tile Q(veh)	0	-	-	0.2	0.1	0.1	-	-

Intersection	
Int Delay, s/veh	2.5

Movement	EBL	EBT	EBR	WBL	WBT	WBR	NBL	NBT	NBR	SBL	SBT	SBR
Vol, veh/h	8	19	7	0	11	5	2	73	6	7	85	11
Conflicting Peds, #/hr	6	0	0	0	0	6	0	0	1	1	0	0
Sign Control	Stop	Stop	Stop	Stop	Stop	Stop	Free	Free	Free	Free	Free	Free
RT Channelized	-	-	None	-	-	None	-	-	None	-	-	None
Storage Length	-	-	-	-	-	-	-	-	-	-	-	-
Veh in Median Storage, #	-	0	-	-	0	-	-	0	-	-	0	-
Grade, %	-	0	-	-	0	-	-	0	-	-	0	-
Peak Hour Factor	76	76	76	76	76	76	76	76	76	76	76	76
Heavy Vehicles, %	2	2	2	2	2	2	2	2	2	2	2	2
Mvmt Flow	11	25	9	0	14	7	3	96	8	9	112	14

Major/Minor	Minor2			Minor1			Major1			Major2		
Conflicting Flow All	266	259	126	272	262	107	132	0	0	110	0	0
Stage 1	144	144	-	111	111	-	-	-	-	-	-	-
Stage 2	122	115	-	161	151	-	-	-	-	-	-	-
Critical Hdwy	7.12	6.52	6.22	7.12	6.52	6.22	4.12	-	-	4.12	-	-
Critical Hdwy Stg 1	6.12	5.52	-	6.12	5.52	-	-	-	-	-	-	-
Critical Hdwy Stg 2	6.12	5.52	-	6.12	5.52	-	-	-	-	-	-	-
Follow-up Hdwy	3.518	4.018	3.318	3.518	4.018	3.318	2.218	-	-	2.218	-	-
Pot Cap-1 Maneuver	687	645	924	680	643	947	1453	-	-	1480	-	-
Stage 1	859	778	-	894	804	-	-	-	-	-	-	-
Stage 2	882	800	-	841	772	-	-	-	-	-	-	-
Platoon blocked, %								-	-		-	-
Mov Cap-1 Maneuver	662	633	919	645	631	941	1452	-	-	1479	-	-
Mov Cap-2 Maneuver	662	633	-	645	631	-	-	-	-	-	-	-
Stage 1	853	769	-	888	798	-	-	-	-	-	-	-
Stage 2	858	794	-	799	763	-	-	-	-	-	-	-

Approach	EB	WB	NB	SB
HCM Control Delay, s	10.6	10.3	0.2	0.5
HCM LOS	B	B		

Minor Lane/Major Mvmt	NBL	NBT	NBR	EBLn1	WBLn1	SBL	SBT	SBR
Capacity (veh/h)	1452	-	-	684	703	1479	-	-
HCM Lane V/C Ratio	0.002	-	-	0.065	0.03	0.006	-	-
HCM Control Delay (s)	7.5	0	-	10.6	10.3	7.4	0	-
HCM Lane LOS	A	A	-	B	B	A	A	-
HCM 95th %tile Q(veh)	0	-	-	0.2	0.1	0	-	-

Intersection	
Intersection Delay, s/veh	7.6
Intersection LOS	A

Movement	EBU	EBL	EBT	EBR	WBU	WBL	WBT	WBR	NBU	NBL	NBT	NBR
Vol, veh/h	0	1	39	6	0	2	46	0	0	14	0	4
Peak Hour Factor	0.92	0.67	0.67	0.67	0.92	0.67	0.67	0.67	0.92	0.67	0.67	0.67
Heavy Vehicles, %	2	2	2	2	2	2	2	2	2	2	2	2
Mvmt Flow	0	1	58	9	0	3	69	0	0	21	0	6
Number of Lanes	0	0	1	0	0	0	1	0	0	0	1	0

Approach	EB	WB	NB
Opposing Approach	WB	EB	SB
Opposing Lanes	1	1	1
Conflicting Approach Left	SB	NB	EB
Conflicting Lanes Left	1	1	1
Conflicting Approach Right	NB	SB	WB
Conflicting Lanes Right	1	1	1
HCM Control Delay	7.5	7.6	7.5
HCM LOS	A	A	A

Lane	NBLn1	EBLn1	WBLn1	SBLn1
Vol Left, %	78%	2%	4%	43%
Vol Thru, %	0%	85%	96%	21%
Vol Right, %	22%	13%	0%	36%
Sign Control	Stop	Stop	Stop	Stop
Traffic Vol by Lane	18	46	48	53
LT Vol	14	1	2	23
Through Vol	0	39	46	11
RT Vol	4	6	0	19
Lane Flow Rate	27	69	72	79
Geometry Grp	1	1	1	1
Degree of Util (X)	0.032	0.078	0.083	0.089
Departure Headway (Hd)	4.261	4.099	4.179	4.069
Convergence, Y/N	Yes	Yes	Yes	Yes
Cap	828	864	849	869
Service Time	2.348	2.169	2.247	2.146
HCM Lane V/C Ratio	0.033	0.08	0.085	0.091
HCM Control Delay	7.5	7.5	7.6	7.6
HCM Lane LOS	A	A	A	A
HCM 95th-tile Q	0.1	0.3	0.3	0.3

Intersection	
Intersection Delay, s/veh	
Intersection LOS	

Movement	SBU	SBL	SBT	SBR
Vol, veh/h	0	23	11	19
Peak Hour Factor	0.92	0.67	0.67	0.67
Heavy Vehicles, %	2	2	2	2
Mvmt Flow	0	34	16	28
Number of Lanes	0	0	1	0

Approach	SB
Opposing Approach	NB
Opposing Lanes	1
Conflicting Approach Left	WB
Conflicting Lanes Left	1
Conflicting Approach Right	EB
Conflicting Lanes Right	1
HCM Control Delay	7.6
HCM LOS	A

Lane

Intersection	
Intersection Delay, s/veh	8.2
Intersection LOS	A

Movement	EBU	EBL	EBT	EBR	WBU	WBL	WBT	WBR	NBU	NBL	NBT	NBR
Vol, veh/h	0	27	35	11	0	10	22	10	0	7	85	5
Peak Hour Factor	0.92	0.76	0.76	0.76	0.92	0.76	0.76	0.76	0.92	0.76	0.76	0.76
Heavy Vehicles, %	2	2	2	2	2	2	2	2	2	2	2	2
Mvmt Flow	0	36	46	14	0	13	29	13	0	9	112	7
Number of Lanes	0	0	1	0	0	0	1	0	0	0	1	0

Approach	EB	WB	NB
Opposing Approach	WB	EB	SB
Opposing Lanes	1	1	1
Conflicting Approach Left	SB	NB	EB
Conflicting Lanes Left	1	1	1
Conflicting Approach Right	NB	SB	WB
Conflicting Lanes Right	1	1	1
HCM Control Delay	8.3	7.9	8.3
HCM LOS	A	A	A

Lane	NBLn1	EBLn1	WBLn1	SBLn1
Vol Left, %	7%	37%	24%	5%
Vol Thru, %	88%	48%	52%	83%
Vol Right, %	5%	15%	24%	12%
Sign Control	Stop	Stop	Stop	Stop
Traffic Vol by Lane	97	73	42	112
LT Vol	7	27	10	6
Through Vol	85	35	22	93
RT Vol	5	11	10	13
Lane Flow Rate	128	96	55	147
Geometry Grp	1	1	1	1
Degree of Util (X)	0.157	0.123	0.07	0.179
Departure Headway (Hd)	4.434	4.603	4.575	4.372
Convergence, Y/N	Yes	Yes	Yes	Yes
Cap	810	780	783	822
Service Time	2.455	2.627	2.601	2.392
HCM Lane V/C Ratio	0.158	0.123	0.07	0.179
HCM Control Delay	8.3	8.3	7.9	8.3
HCM Lane LOS	A	A	A	A
HCM 95th-tile Q	0.6	0.4	0.2	0.6

Intersection	
Intersection Delay, s/veh	
Intersection LOS	

Movement	SBU	SBL	SBT	SBR
Vol, veh/h	0	6	93	13
Peak Hour Factor	0.92	0.76	0.76	0.76
Heavy Vehicles, %	2	2	2	2
Mvmt Flow	0	8	122	17
Number of Lanes	0	0	1	0

Approach	SB
Opposing Approach	NB
Opposing Lanes	1
Conflicting Approach Left	WB
Conflicting Lanes Left	1
Conflicting Approach Right	EB
Conflicting Lanes Right	1
HCM Control Delay	8.3
HCM LOS	A

Lane

Intersection	
Intersection Delay, s/veh	7.3
Intersection LOS	A

Movement	EBU	EBL	EBT	EBR	WBU	WBL	WBT	WBR	NBU	NBL	NBT	NBR
Vol, veh/h	0	0	23	4	0	1	18	0	0	4	0	2
Peak Hour Factor	0.92	0.67	0.67	0.67	0.92	0.67	0.67	0.67	0.92	0.67	0.67	0.67
Heavy Vehicles, %	2	2	2	2	2	2	2	2	2	2	2	2
Mvmt Flow	0	0	34	6	0	1	27	0	0	6	0	3
Number of Lanes	0	0	1	0	0	0	1	0	0	0	1	0

Approach	EB	WB	NB
Opposing Approach	WB	EB	SB
Opposing Lanes	1	1	1
Conflicting Approach Left	SB	NB	EB
Conflicting Lanes Left	1	1	1
Conflicting Approach Right	NB	SB	WB
Conflicting Lanes Right	1	1	1
HCM Control Delay	7.2	7.3	7.1
HCM LOS	A	A	A

Lane	NBLn1	EBLn1	WBLn1	SBLn1
Vol Left, %	67%	0%	5%	46%
Vol Thru, %	0%	85%	95%	20%
Vol Right, %	33%	15%	0%	34%
Sign Control	Stop	Stop	Stop	Stop
Traffic Vol by Lane	6	27	19	50
LT Vol	4	0	1	23
Through Vol	0	23	18	10
RT Vol	2	4	0	17
Lane Flow Rate	9	40	28	75
Geometry Grp	1	1	1	1
Degree of Util (X)	0.01	0.045	0.032	0.082
Departure Headway (Hd)	4.043	4.011	4.12	3.948
Convergence, Y/N	Yes	Yes	Yes	Yes
Cap	881	889	865	906
Service Time	2.088	2.053	2.164	1.98
HCM Lane V/C Ratio	0.01	0.045	0.032	0.083
HCM Control Delay	7.1	7.2	7.3	7.3
HCM Lane LOS	A	A	A	A
HCM 95th-tile Q	0	0.1	0.1	0.3

Intersection	
Intersection Delay, s/veh	
Intersection LOS	

Movement	SBU	SBL	SBT	SBR
Vol, veh/h	0	23	10	17
Peak Hour Factor	0.92	0.67	0.67	0.67
Heavy Vehicles, %	2	2	2	2
Mvmt Flow	0	34	15	25
Number of Lanes	0	0	1	0

Approach	SB
Opposing Approach	NB
Opposing Lanes	1
Conflicting Approach Left	WB
Conflicting Lanes Left	1
Conflicting Approach Right	EB
Conflicting Lanes Right	1
HCM Control Delay	7.3
HCM LOS	A

Lane

Intersection	
Intersection Delay, s/veh	7.8
Intersection LOS	A

Movement	EBU	EBL	EBT	EBR	WBU	WBL	WBT	WBR	NBU	NBL	NBT	NBR
Vol, veh/h	0	8	19	7	0	0	11	5	0	2	73	6
Peak Hour Factor	0.92	0.76	0.76	0.76	0.92	0.76	0.76	0.76	0.92	0.76	0.76	0.76
Heavy Vehicles, %	2	2	2	2	2	2	2	2	2	2	2	2
Mvmt Flow	0	11	25	9	0	0	14	7	0	3	96	8
Number of Lanes	0	0	1	0	0	0	1	0	0	0	1	0

Approach	EB	WB	NB
Opposing Approach	WB	EB	SB
Opposing Lanes	1	1	1
Conflicting Approach Left	SB	NB	EB
Conflicting Lanes Left	1	1	1
Conflicting Approach Right	NB	SB	WB
Conflicting Lanes Right	1	1	1
HCM Control Delay	7.7	7.4	7.8
HCM LOS	A	A	A

Lane	NBLn1	EBLn1	WBLn1	SBLn1
Vol Left, %	2%	24%	0%	7%
Vol Thru, %	90%	56%	69%	83%
Vol Right, %	7%	21%	31%	11%
Sign Control	Stop	Stop	Stop	Stop
Traffic Vol by Lane	81	34	16	103
LT Vol	2	8	0	7
Through Vol	73	19	11	85
RT Vol	6	7	5	11
Lane Flow Rate	107	45	21	136
Geometry Grp	1	1	1	1
Degree of Util (X)	0.122	0.055	0.025	0.154
Departure Headway (Hd)	4.113	4.41	4.325	4.08
Convergence, Y/N	Yes	Yes	Yes	Yes
Cap	862	817	832	870
Service Time	2.184	2.41	2.327	2.145
HCM Lane V/C Ratio	0.124	0.055	0.025	0.156
HCM Control Delay	7.8	7.7	7.4	7.9
HCM Lane LOS	A	A	A	A
HCM 95th-tile Q	0.4	0.2	0.1	0.5

Intersection	
Intersection Delay, s/veh	
Intersection LOS	

Movement	SBU	SBL	SBT	SBR
Vol, veh/h	0	7	85	11
Peak Hour Factor	0.92	0.76	0.76	0.76
Heavy Vehicles, %	2	2	2	2
Mvmt Flow	0	9	112	14
Number of Lanes	0	0	1	0

Approach	SB
Opposing Approach	NB
Opposing Lanes	1
Conflicting Approach Left	WB
Conflicting Lanes Left	1
Conflicting Approach Right	EB
Conflicting Lanes Right	1
HCM Control Delay	7.9
HCM LOS	A

Lane

Appendix D

Intersection
Level of Service
Calculations

Existing Plus Project
Conditions

Intersection	
Intersection Delay, s/veh	9.2
Intersection LOS	A

Movement	EBU	EBL	EBT	EBR	WBU	WBL	WBT	WBR	NBU	NBL	NBT	NBR
Vol, veh/h	0	29	12	4	0	12	9	75	0	5	155	28
Peak Hour Factor	0.92	0.83	0.83	0.83	0.92	0.83	0.83	0.83	0.92	0.83	0.83	0.83
Heavy Vehicles, %	2	12	12	12	2	4	4	4	2	3	3	3
Mvmt Flow	0	35	14	5	0	14	11	90	0	6	187	34
Number of Lanes	0	0	1	0	0	0	1	0	0	0	1	0

Approach	EB	WB	NB
Opposing Approach	WB	EB	SB
Opposing Lanes	1	1	1
Conflicting Approach Left	SB	NB	EB
Conflicting Lanes Left	1	1	1
Conflicting Approach Right	NB	SB	WB
Conflicting Lanes Right	1	1	1
HCM Control Delay	8.9	8.5	9.4
HCM LOS	A	A	A

Lane	NBLn1	EBLn1	WBLn1	SBLn1
Vol Left, %	3%	64%	12%	34%
Vol Thru, %	82%	27%	9%	62%
Vol Right, %	15%	9%	78%	5%
Sign Control	Stop	Stop	Stop	Stop
Traffic Vol by Lane	188	45	96	182
LT Vol	5	29	12	61
Through Vol	155	12	9	112
RT Vol	28	4	75	9
Lane Flow Rate	227	54	116	219
Geometry Grp	1	1	1	1
Degree of Util (X)	0.285	0.081	0.148	0.283
Departure Headway (Hd)	4.535	5.356	4.622	4.642
Convergence, Y/N	Yes	Yes	Yes	Yes
Cap	791	666	773	772
Service Time	2.574	3.412	2.672	2.681
HCM Lane V/C Ratio	0.287	0.081	0.15	0.284
HCM Control Delay	9.4	8.9	8.5	9.5
HCM Lane LOS	A	A	A	A
HCM 95th-tile Q	1.2	0.3	0.5	1.2

Intersection	
Intersection Delay, s/veh	
Intersection LOS	

Movement	SBU	SBL	SBT	SBR
Vol, veh/h	0	61	112	9
Peak Hour Factor	0.92	0.83	0.83	0.83
Heavy Vehicles, %	2	2	2	2
Mvmt Flow	0	73	135	11
Number of Lanes	0	0	1	0

Approach	SB
Opposing Approach	NB
Opposing Lanes	1
Conflicting Approach Left	WB
Conflicting Lanes Left	1
Conflicting Approach Right	EB
Conflicting Lanes Right	1
HCM Control Delay	9.5
HCM LOS	A

Lane

Intersection	
Int Delay, s/veh	6.8

Movement	EBL	EBT	EBR	WBL	WBT	WBR	NBL	NBT	NBR	SBL	SBT	SBR
Vol, veh/h	10	36	6	2	43	2	14	2	4	22	15	41
Conflicting Peds, #/hr	5	0	1	1	0	5	16	0	0	0	0	16
Sign Control	Stop	Stop	Stop	Stop	Stop	Stop	Free	Free	Free	Free	Free	Free
RT Channelized	-	-	None	-	-	None	-	-	None	-	-	None
Storage Length	-	-	-	-	-	-	-	-	-	-	-	-
Veh in Median Storage, #	-	0	-	-	0	-	-	0	-	-	0	-
Grade, %	-	0	-	-	0	-	-	0	-	-	0	-
Peak Hour Factor	67	67	67	67	67	67	67	67	67	67	67	67
Heavy Vehicles, %	2	2	2	2	2	2	2	2	2	2	2	2
Mvmt Flow	15	54	9	3	64	3	21	3	6	33	22	61

Major/Minor	Minor2			Minor1			Major1			Major2		
Conflicting Flow All	210	180	74	208	207	27	89	0	0	14	0	0
Stage 1	124	124	-	53	53	-	-	-	-	-	-	-
Stage 2	86	56	-	155	154	-	-	-	-	-	-	-
Critical Hdwy	7.12	6.52	6.22	7.12	6.52	6.22	4.12	-	-	4.12	-	-
Critical Hdwy Stg 1	6.12	5.52	-	6.12	5.52	-	-	-	-	-	-	-
Critical Hdwy Stg 2	6.12	5.52	-	6.12	5.52	-	-	-	-	-	-	-
Follow-up Hdwy	3.518	4.018	3.318	3.518	4.018	3.318	2.218	-	-	2.218	-	-
Pot Cap-1 Maneuver	747	714	988	749	690	1048	1506	-	-	1604	-	-
Stage 1	880	793	-	960	851	-	-	-	-	-	-	-
Stage 2	922	848	-	847	770	-	-	-	-	-	-	-
Platoon blocked, %								-	-		-	-
Mov Cap-1 Maneuver	659	683	971	667	660	1030	1486	-	-	1583	-	-
Mov Cap-2 Maneuver	659	683	-	667	660	-	-	-	-	-	-	-
Stage 1	864	772	-	943	836	-	-	-	-	-	-	-
Stage 2	826	833	-	753	750	-	-	-	-	-	-	-

Approach	EB	WB	NB	SB
HCM Control Delay, s	10.8	11	5.2	2.1
HCM LOS	B	B		

Minor Lane/Major Mvmt	NBL	NBT	NBR	EBLn1	WBLn1	SBL	SBT	SBR
Capacity (veh/h)	1486	-	-	702	671	1583	-	-
HCM Lane V/C Ratio	0.014	-	-	0.111	0.105	0.021	-	-
HCM Control Delay (s)	7.5	0	-	10.8	11	7.3	0	-
HCM Lane LOS	A	A	-	B	B	A	A	-
HCM 95th %tile Q(veh)	0	-	-	0.4	0.3	0.1	-	-

Intersection	
Int Delay, s/veh	4.5

Movement	EBL	EBT	EBR	WBL	WBT	WBR	NBL	NBT	NBR	SBL	SBT	SBR
Vol, veh/h	21	36	14	10	23	10	8	85	5	7	93	10
Conflicting Peds, #/hr	3	0	14	14	0	3	5	0	2	2	0	5
Sign Control	Stop	Stop	Stop	Stop	Stop	Stop	Free	Free	Free	Free	Free	Free
RT Channelized	-	-	None	-	-	None	-	-	None	-	-	None
Storage Length	-	-	-	-	-	-	-	-	-	-	-	-
Veh in Median Storage, #	-	0	-	-	0	-	-	0	-	-	0	-
Grade, %	-	0	-	-	0	-	-	0	-	-	0	-
Peak Hour Factor	76	76	76	76	76	76	76	76	76	76	76	76
Heavy Vehicles, %	2	2	2	2	2	2	2	2	2	2	2	2
Mvmt Flow	28	47	18	13	30	13	11	112	7	9	122	13

Major/Minor	Minor2			Minor1			Major1			Major2		
Conflicting Flow All	333	314	148	344	318	134	150	0	0	132	0	0
Stage 1	161	161	-	150	150	-	-	-	-	-	-	-
Stage 2	172	153	-	194	168	-	-	-	-	-	-	-
Critical Hdwy	7.12	6.52	6.22	7.12	6.52	6.22	4.12	-	-	4.12	-	-
Critical Hdwy Stg 1	6.12	5.52	-	6.12	5.52	-	-	-	-	-	-	-
Critical Hdwy Stg 2	6.12	5.52	-	6.12	5.52	-	-	-	-	-	-	-
Follow-up Hdwy	3.518	4.018	3.318	3.518	4.018	3.318	2.218	-	-	2.218	-	-
Pot Cap-1 Maneuver	620	601	899	610	598	915	1431	-	-	1453	-	-
Stage 1	841	765	-	853	773	-	-	-	-	-	-	-
Stage 2	830	771	-	808	759	-	-	-	-	-	-	-
Platoon blocked, %								-	-		-	-
Mov Cap-1 Maneuver	571	578	885	545	575	901	1425	-	-	1447	-	-
Mov Cap-2 Maneuver	571	578	-	545	575	-	-	-	-	-	-	-
Stage 1	825	751	-	836	758	-	-	-	-	-	-	-
Stage 2	776	756	-	733	745	-	-	-	-	-	-	-

Approach	EB	WB	NB	SB
HCM Control Delay, s	11.9	11.4	0.6	0.5
HCM LOS	B	B		

Minor Lane/Major Mvmt	NBL	NBT	NBR	EBLn1	WBLn1	SBL	SBT	SBR
Capacity (veh/h)	1425	-	-	618	619	1447	-	-
HCM Lane V/C Ratio	0.007	-	-	0.151	0.091	0.006	-	-
HCM Control Delay (s)	7.5	0	-	11.9	11.4	7.5	0	-
HCM Lane LOS	A	A	-	B	B	A	A	-
HCM 95th %tile Q(veh)	0	-	-	0.5	0.3	0	-	-

Intersection	
Intersection Delay, s/veh	9.1
Intersection LOS	A

Movement	EBU	EBL	EBT	EBR	WBU	WBL	WBT	WBR	NBU	NBL	NBT	NBR
Vol, veh/h	0	17	2	5	0	8	3	43	0	4	145	15
Peak Hour Factor	0.92	0.91	0.91	0.91	0.92	0.91	0.91	0.91	0.92	0.91	0.91	0.91
Heavy Vehicles, %	2	2	2	2	2	2	2	2	2	2	2	2
Mvmt Flow	0	19	2	5	0	9	3	47	0	4	159	16
Number of Lanes	0	0	1	0	0	0	1	0	0	0	1	0

Approach	EB	WB	NB
Opposing Approach	WB	EB	SB
Opposing Lanes	1	1	1
Conflicting Approach Left	SB	NB	EB
Conflicting Lanes Left	1	1	1
Conflicting Approach Right	NB	SB	WB
Conflicting Lanes Right	1	1	1
HCM Control Delay	8.3	8	8.7
HCM LOS	A	A	A

Lane	NBLn1	EBLn1	WBLn1	SBLn1
Vol Left, %	2%	71%	15%	18%
Vol Thru, %	88%	8%	6%	73%
Vol Right, %	9%	21%	80%	9%
Sign Control	Stop	Stop	Stop	Stop
Traffic Vol by Lane	164	24	54	267
LT Vol	4	17	8	48
Through Vol	145	2	3	195
RT Vol	15	5	43	24
Lane Flow Rate	180	26	59	293
Geometry Grp	1	1	1	1
Degree of Util (X)	0.22	0.037	0.075	0.351
Departure Headway (Hd)	4.392	5.072	4.561	4.31
Convergence, Y/N	Yes	Yes	Yes	Yes
Cap	818	706	785	836
Service Time	2.412	3.104	2.59	2.328
HCM Lane V/C Ratio	0.22	0.037	0.075	0.35
HCM Control Delay	8.7	8.3	8	9.7
HCM Lane LOS	A	A	A	A
HCM 95th-tile Q	0.8	0.1	0.2	1.6

Intersection	
Intersection Delay, s/veh	
Intersection LOS	

Movement	SBU	SBL	SBT	SBR
Vol, veh/h	0	48	195	24
Peak Hour Factor	0.92	0.91	0.91	0.91
Heavy Vehicles, %	2	2	2	2
Mvmt Flow	0	53	214	26
Number of Lanes	0	0	1	0

Approach	SB
Opposing Approach	NB
Opposing Lanes	1
Conflicting Approach Left	WB
Conflicting Lanes Left	1
Conflicting Approach Right	EB
Conflicting Lanes Right	1
HCM Control Delay	9.7
HCM LOS	A

Lane

Intersection	
Int Delay, s/veh	6.2

Movement	EBL	EBT	EBR	WBL	WBT	WBR	NBL	NBT	NBR	SBL	SBT	SBR
Vol, veh/h	23	22	4	1	16	5	4	4	2	24	13	32
Conflicting Peds, #/hr	1	0	5	5	0	1	17	0	0	0	0	17
Sign Control	Stop	Stop	Stop	Stop	Stop	Stop	Free	Free	Free	Free	Free	Free
RT Channelized	-	-	None	-	-	None	-	-	None	-	-	None
Storage Length	-	-	-	-	-	-	-	-	-	-	-	-
Veh in Median Storage, #	-	0	-	-	0	-	-	0	-	-	0	-
Grade, %	-	0	-	-	0	-	-	0	-	-	0	-
Peak Hour Factor	67	67	67	67	67	67	67	67	67	67	67	67
Heavy Vehicles, %	2	2	2	2	2	2	2	2	2	2	2	2
Mvmt Flow	34	33	6	1	24	7	6	6	3	36	19	48

Major/Minor	Minor2			Minor1			Major1			Major2		
Conflicting Flow All	160	146	65	163	168	29	72	0	0	14	0	0
Stage 1	120	120	-	24	24	-	-	-	-	-	-	-
Stage 2	40	26	-	139	144	-	-	-	-	-	-	-
Critical Hdwy	7.12	6.52	6.22	7.12	6.52	6.22	4.12	-	-	4.12	-	-
Critical Hdwy Stg 1	6.12	5.52	-	6.12	5.52	-	-	-	-	-	-	-
Critical Hdwy Stg 2	6.12	5.52	-	6.12	5.52	-	-	-	-	-	-	-
Follow-up Hdwy	3.518	4.018	3.318	3.518	4.018	3.318	2.218	-	-	2.218	-	-
Pot Cap-1 Maneuver	806	745	999	802	725	1046	1528	-	-	1604	-	-
Stage 1	884	796	-	994	875	-	-	-	-	-	-	-
Stage 2	975	874	-	864	778	-	-	-	-	-	-	-
Platoon blocked, %								-	-		-	-
Mov Cap-1 Maneuver	749	718	981	739	699	1027	1506	-	-	1581	-	-
Mov Cap-2 Maneuver	749	718	-	739	699	-	-	-	-	-	-	-
Stage 1	877	774	-	986	868	-	-	-	-	-	-	-
Stage 2	924	867	-	791	756	-	-	-	-	-	-	-

Approach	EB	WB	NB	SB
HCM Control Delay, s	10.3	10	3	2.5
HCM LOS	B	B		

Minor Lane/Major Mvmt	NBL	NBT	NBR	EBLn1	WBLn1	SBL	SBT	SBR
Capacity (veh/h)	1506	-	-	749	756	1581	-	-
HCM Lane V/C Ratio	0.004	-	-	0.098	0.043	0.023	-	-
HCM Control Delay (s)	7.4	0	-	10.3	10	7.3	0	-
HCM Lane LOS	A	A	-	B	B	A	A	-
HCM 95th %tile Q(veh)	0	-	-	0.3	0.1	0.1	-	-

Intersection	
Int Delay, s/veh	2.7

Movement	EBL	EBT	EBR	WBL	WBT	WBR	NBL	NBT	NBR	SBL	SBT	SBR
Vol, veh/h	5	20	9	0	12	6	6	73	6	7	84	9
Conflicting Peds, #/hr	6	0	0	0	0	6	0	0	1	1	0	0
Sign Control	Stop	Stop	Stop	Stop	Stop	Stop	Free	Free	Free	Free	Free	Free
RT Channelized	-	-	None	-	-	None	-	-	None	-	-	None
Storage Length	-	-	-	-	-	-	-	-	-	-	-	-
Veh in Median Storage, #	-	0	-	-	0	-	-	0	-	-	0	-
Grade, %	-	0	-	-	0	-	-	0	-	-	0	-
Peak Hour Factor	76	76	76	76	76	76	76	76	76	76	76	76
Heavy Vehicles, %	2	2	2	2	2	2	2	2	2	2	2	2
Mvmt Flow	7	26	12	0	16	8	8	96	8	9	111	12

Major/Minor	Minor2			Minor1			Major1			Major2		
Conflicting Flow All	275	267	123	282	269	107	128	0	0	110	0	0
Stage 1	141	141	-	122	122	-	-	-	-	-	-	-
Stage 2	134	126	-	160	147	-	-	-	-	-	-	-
Critical Hdwy	7.12	6.52	6.22	7.12	6.52	6.22	4.12	-	-	4.12	-	-
Critical Hdwy Stg 1	6.12	5.52	-	6.12	5.52	-	-	-	-	-	-	-
Critical Hdwy Stg 2	6.12	5.52	-	6.12	5.52	-	-	-	-	-	-	-
Follow-up Hdwy	3.518	4.018	3.318	3.518	4.018	3.318	2.218	-	-	2.218	-	-
Pot Cap-1 Maneuver	677	639	928	670	637	947	1458	-	-	1480	-	-
Stage 1	862	780	-	882	795	-	-	-	-	-	-	-
Stage 2	869	792	-	842	775	-	-	-	-	-	-	-
Platoon blocked, %								-	-		-	-
Mov Cap-1 Maneuver	648	624	923	630	622	941	1457	-	-	1479	-	-
Mov Cap-2 Maneuver	648	624	-	630	622	-	-	-	-	-	-	-
Stage 1	853	771	-	872	786	-	-	-	-	-	-	-
Stage 2	839	783	-	797	766	-	-	-	-	-	-	-

Approach	EB	WB	NB	SB
HCM Control Delay, s	10.6	10.3	0.5	0.5
HCM LOS	B	B		

Minor Lane/Major Mvmt	NBL	NBT	NBR	EBLn1	WBLn1	SBL	SBT	SBR
Capacity (veh/h)	1457	-	-	687	701	1479	-	-
HCM Lane V/C Ratio	0.005	-	-	0.065	0.034	0.006	-	-
HCM Control Delay (s)	7.5	0	-	10.6	10.3	7.4	0	-
HCM Lane LOS	A	A	-	B	B	A	A	-
HCM 95th %tile Q(veh)	0	-	-	0.2	0.1	0	-	-

Intersection	
Intersection Delay, s/veh	7.7
Intersection LOS	A

Movement	EBU	EBL	EBT	EBR	WBU	WBL	WBT	WBR	NBU	NBL	NBT	NBR
Vol, veh/h	0	10	36	6	0	2	43	2	0	14	2	4
Peak Hour Factor	0.92	0.67	0.67	0.67	0.92	0.67	0.67	0.67	0.92	0.67	0.67	0.67
Heavy Vehicles, %	2	2	2	2	2	2	2	2	2	2	2	2
Mvmt Flow	0	15	54	9	0	3	64	3	0	21	3	6
Number of Lanes	0	0	1	0	0	0	1	0	0	0	1	0

Approach	EB	WB	NB
Opposing Approach	WB	EB	SB
Opposing Lanes	1	1	1
Conflicting Approach Left	SB	NB	EB
Conflicting Lanes Left	1	1	1
Conflicting Approach Right	NB	SB	WB
Conflicting Lanes Right	1	1	1
HCM Control Delay	7.7	7.7	7.6
HCM LOS	A	A	A

Lane	NBLn1	EBLn1	WBLn1	SBLn1
Vol Left, %	70%	19%	4%	28%
Vol Thru, %	10%	69%	91%	19%
Vol Right, %	20%	12%	4%	53%
Sign Control	Stop	Stop	Stop	Stop
Traffic Vol by Lane	20	52	47	78
LT Vol	14	10	2	22
Through Vol	2	36	43	15
RT Vol	4	6	2	41
Lane Flow Rate	30	78	70	116
Geometry Grp	1	1	1	1
Degree of Util (X)	0.037	0.091	0.082	0.128
Departure Headway (Hd)	4.405	4.211	4.231	3.952
Convergence, Y/N	Yes	Yes	Yes	Yes
Cap	818	839	834	893
Service Time	2.405	2.298	2.32	2.042
HCM Lane V/C Ratio	0.037	0.093	0.084	0.13
HCM Control Delay	7.6	7.7	7.7	7.6
HCM Lane LOS	A	A	A	A
HCM 95th-tile Q	0.1	0.3	0.3	0.4

Intersection	
Intersection Delay, s/veh	
Intersection LOS	

Movement	SBU	SBL	SBT	SBR
Vol, veh/h	0	22	15	41
Peak Hour Factor	0.92	0.67	0.67	0.67
Heavy Vehicles, %	2	2	2	2
Mvmt Flow	0	33	22	61
Number of Lanes	0	0	1	0

Approach	SB
Opposing Approach	NB
Opposing Lanes	1
Conflicting Approach Left	WB
Conflicting Lanes Left	1
Conflicting Approach Right	EB
Conflicting Lanes Right	1
HCM Control Delay	7.6
HCM LOS	A

Lane

Intersection	
Intersection Delay, s/veh	8.2
Intersection LOS	A

Movement	EBU	EBL	EBT	EBR	WBU	WBL	WBT	WBR	NBU	NBL	NBT	NBR
Vol, veh/h	0	21	36	14	0	10	23	10	0	8	85	5
Peak Hour Factor	0.92	0.76	0.76	0.76	0.92	0.76	0.76	0.76	0.92	0.76	0.76	0.76
Heavy Vehicles, %	2	2	2	2	2	2	2	2	2	2	2	2
Mvmt Flow	0	28	47	18	0	13	30	13	0	11	112	7
Number of Lanes	0	0	1	0	0	0	1	0	0	0	1	0

Approach	EB	WB	NB
Opposing Approach	WB	EB	SB
Opposing Lanes	1	1	1
Conflicting Approach Left	SB	NB	EB
Conflicting Lanes Left	1	1	1
Conflicting Approach Right	NB	SB	WB
Conflicting Lanes Right	1	1	1
HCM Control Delay	8.2	8	8.3
HCM LOS	A	A	A

Lane	NBLn1	EBLn1	WBLn1	SBLn1
Vol Left, %	8%	30%	23%	6%
Vol Thru, %	87%	51%	53%	85%
Vol Right, %	5%	20%	23%	9%
Sign Control	Stop	Stop	Stop	Stop
Traffic Vol by Lane	98	71	43	110
LT Vol	8	21	10	7
Through Vol	85	36	23	93
RT Vol	5	14	10	10
Lane Flow Rate	129	93	57	145
Geometry Grp	1	1	1	1
Degree of Util (X)	0.159	0.118	0.072	0.176
Departure Headway (Hd)	4.43	4.562	4.573	4.387
Convergence, Y/N	Yes	Yes	Yes	Yes
Cap	811	787	784	819
Service Time	2.449	2.584	2.596	2.406
HCM Lane V/C Ratio	0.159	0.118	0.073	0.177
HCM Control Delay	8.3	8.2	8	8.3
HCM Lane LOS	A	A	A	A
HCM 95th-tile Q	0.6	0.4	0.2	0.6

Intersection	
Intersection Delay, s/veh	
Intersection LOS	

Movement	SBU	SBL	SBT	SBR
Vol, veh/h	0	7	93	10
Peak Hour Factor	0.92	0.76	0.76	0.76
Heavy Vehicles, %	2	2	2	2
Mvmt Flow	0	9	122	13
Number of Lanes	0	0	1	0

Approach	SB
Opposing Approach	NB
Opposing Lanes	1
Conflicting Approach Left	WB
Conflicting Lanes Left	1
Conflicting Approach Right	EB
Conflicting Lanes Right	1
HCM Control Delay	8.3
HCM LOS	A

Lane

Intersection	
Intersection Delay, s/veh	7.5
Intersection LOS	A

Movement	EBU	EBL	EBT	EBR	WBU	WBL	WBT	WBR	NBU	NBL	NBT	NBR
Vol, veh/h	0	23	22	4	0	1	16	5	0	4	4	2
Peak Hour Factor	0.92	0.67	0.67	0.67	0.92	0.67	0.67	0.67	0.92	0.67	0.67	0.67
Heavy Vehicles, %	2	2	2	2	2	2	2	2	2	2	2	2
Mvmt Flow	0	34	33	6	0	1	24	7	0	6	6	3
Number of Lanes	0	0	1	0	0	0	1	0	0	0	1	0

Approach	EB	WB	NB
Opposing Approach	WB	EB	SB
Opposing Lanes	1	1	1
Conflicting Approach Left	SB	NB	EB
Conflicting Lanes Left	1	1	1
Conflicting Approach Right	NB	SB	WB
Conflicting Lanes Right	1	1	1
HCM Control Delay	7.7	7.3	7.3
HCM LOS	A	A	A

Lane	NBLn1	EBLn1	WBLn1	SBLn1
Vol Left, %	40%	47%	5%	35%
Vol Thru, %	40%	45%	73%	19%
Vol Right, %	20%	8%	23%	46%
Sign Control	Stop	Stop	Stop	Stop
Traffic Vol by Lane	10	49	22	69
LT Vol	4	23	1	24
Through Vol	4	22	16	13
RT Vol	2	4	5	32
Lane Flow Rate	15	73	33	103
Geometry Grp	1	1	1	1
Degree of Util (X)	0.017	0.086	0.037	0.112
Departure Headway (Hd)	4.157	4.21	4.069	3.919
Convergence, Y/N	Yes	Yes	Yes	Yes
Cap	851	845	871	906
Service Time	2.232	2.264	2.135	1.979
HCM Lane V/C Ratio	0.018	0.086	0.038	0.114
HCM Control Delay	7.3	7.7	7.3	7.5
HCM Lane LOS	A	A	A	A
HCM 95th-tile Q	0.1	0.3	0.1	0.4

Intersection	
Intersection Delay, s/veh	
Intersection LOS	

Movement	SBU	SBL	SBT	SBR
Vol, veh/h	0	24	13	32
Peak Hour Factor	0.92	0.67	0.67	0.67
Heavy Vehicles, %	2	2	2	2
Mvmt Flow	0	36	19	48
Number of Lanes	0	0	1	0

Approach	SB
Opposing Approach	NB
Opposing Lanes	1
Conflicting Approach Left	WB
Conflicting Lanes Left	1
Conflicting Approach Right	EB
Conflicting Lanes Right	1
HCM Control Delay	7.5
HCM LOS	A

Lane

Intersection	
Intersection Delay, s/veh	7.8
Intersection LOS	A

Movement	EBU	EBL	EBT	EBR	WBU	WBL	WBT	WBR	NBU	NBL	NBT	NBR
Vol, veh/h	0	5	20	9	0	0	12	6	0	6	73	6
Peak Hour Factor	0.92	0.76	0.76	0.76	0.92	0.76	0.76	0.76	0.92	0.76	0.76	0.76
Heavy Vehicles, %	2	2	2	2	2	2	2	2	2	2	2	2
Mvmt Flow	0	7	26	12	0	0	16	8	0	8	96	8
Number of Lanes	0	0	1	0	0	0	1	0	0	0	1	0

Approach	EB	WB	NB
Opposing Approach	WB	EB	SB
Opposing Lanes	1	1	1
Conflicting Approach Left	SB	NB	EB
Conflicting Lanes Left	1	1	1
Conflicting Approach Right	NB	SB	WB
Conflicting Lanes Right	1	1	1
HCM Control Delay	7.6	7.4	7.8
HCM LOS	A	A	A

Lane	NBLn1	EBLn1	WBLn1	SBLn1
Vol Left, %	7%	15%	0%	7%
Vol Thru, %	86%	59%	67%	84%
Vol Right, %	7%	26%	33%	9%
Sign Control	Stop	Stop	Stop	Stop
Traffic Vol by Lane	85	34	18	100
LT Vol	6	5	0	7
Through Vol	73	20	12	84
RT Vol	6	9	6	9
Lane Flow Rate	112	45	24	132
Geometry Grp	1	1	1	1
Degree of Util (X)	0.128	0.054	0.028	0.15
Departure Headway (Hd)	4.125	4.363	4.316	4.098
Convergence, Y/N	Yes	Yes	Yes	Yes
Cap	860	826	834	866
Service Time	2.196	2.363	2.317	2.165
HCM Lane V/C Ratio	0.13	0.054	0.029	0.152
HCM Control Delay	7.8	7.6	7.4	7.9
HCM Lane LOS	A	A	A	A
HCM 95th-tile Q	0.4	0.2	0.1	0.5

Intersection	
Intersection Delay, s/veh	
Intersection LOS	

Movement	SBU	SBL	SBT	SBR
Vol, veh/h	0	7	84	9
Peak Hour Factor	0.92	0.76	0.76	0.76
Heavy Vehicles, %	2	2	2	2
Mvmt Flow	0	9	111	12
Number of Lanes	0	0	1	0

Approach	SB
Opposing Approach	NB
Opposing Lanes	1
Conflicting Approach Left	WB
Conflicting Lanes Left	1
Conflicting Approach Right	EB
Conflicting Lanes Right	1
HCM Control Delay	7.9
HCM LOS	A

Lane

Appendix E

Approved Projects within Hollister

APPROVED DEVELOPMENT PROJECTS

Project Name	Location	Project Description		Daily Trips	AM Peak Hour In	AM Peak Hour Out	AM Peak Hour Total	PM Peak Hour In	PM Peak Hour Out	PM Peak Hour Total
1 Fairfield Inn & Suites Marriot Hotel	380 Gateway Drive	Hotel	81 rooms	723	31	23	54	28	29	57
2 Community Food Bank of San Benito County	172 McCloskey Road	Office	3,072 SF	34	4	1	5	1	4	5
		Warehouse	10,560 SF	38	2	1	3	1	2	3
3 1980 Airway Drive	1980 Airway Drive	Industrial	15,600 SF	109	12	2	14	2	13	15
		Mech. Shop/Office	6,250 Sf	69	9	1	10	2	7	9
4 North Florida Development (Ladd Lane)	W/o Ladd Lane, at Hillock Drive	Medical Office/Retail	12,420 SF	449	24	6	30	12	32	44
		Retail	20,500 SF	909	67	73	140	25	31	56
		Apartments	63 Units	419	6	26	32	25	14	39
		Courtyard Units	25 Units	238	5	14	19	16	9	25
		Single Family	13 Units	124	3	7	10	8	5	13
5 Airport Business Park	Flynn Rd, betweeen SR 25 and San Felipe Rd	Industrial	12,100 SF	84	10	1	11	1	11	12
6 Hollister Business Park	Fallon Rd	Warehouse	49,569 SF	176	12	3	15	4	12	16
7 Legacy Guerra (Lowes Project -190 Hillcreset Rd)	W/o Hwy 25 bypass between Meridian St and Hillcrest Rd	Home Impr	150,000 SF	4,611	128	96	224	172	178	350
		Commercial	100,480 SF	4,290	60	36	96	179	194	373
		Apartments	120 Units	798	12	49	61	48	26	74
8 Cerrato Estates	Between Meridian St and Hillcrest Rd, w/o Memorial Drive	Residential	241 Units	2,294	45	136	181	152	89	241
9 Villages Brigantino	North of Brigantino Drive	Residential	154 Units	1,466	29	87	116	97	57	154
10 CSDC	Westside Blvd between 4th Street and South Street	Apartments	15 Units	100	2	6	8	6	3	9
11 Pacific West Communities	NE corner of Miller Rd/San Juan Rd	Apartments	57 Units	379	6	23	29	23	12	35
12 Valles	E/o Cushman Street, S/o Nash Rd	Apartments	50 Units	333	5	21	26	20	11	31
13 Silver Oaks	W/o Valley View, s/o Hazel Hawkins Hospital, e/o Airline, n/o Valle Way	Senior Apartments	170 Units	585	11	21	32	23	16	39
14 Braer	N/w of San Benito St/South St	Apartments	6 Units	40	1	2	3	3	1	4
15 Eden West	Between Apricot KLn, Line St, Steinbeck Dr, and Cannery Row	Residential	55 Units	524	10	31	41	35	20	55
16 Rajkovich	W/o San Benito St and Cienega Rd	Residential	81 Units	771	15	46	61	51	30	81
		Apartments	100 Units	665	10	41	51	40	22	62
17 Coria	W/o Westside Blvd at Jan Avenue	Residential	7 Units	67	1	4	5	4	3	7
18 Hillview 2	Buena Vista Rd, w/o Ranchito Dr	Residential	30 Units	286	6	17	23	19	11	30
19 Award Homes	W/o Fairview, s/o St. Benedict's Church, e/o Calistoga Dr	Residential	567 Units	5,398	106	319	425	357	210	567
		Apartments	100 Units	665	10	41	51	40	22	62
20 Givson/Sunnyslope	Between sr 25 and Black Forest	Residential	29 Units	276	6	16	22	18	11	29
21 Las Brisas 7	N/o Sunnuyslope, E and W of Clearview along Marily Ct and McDonald Ct	Residential	3 Units	29	1	1	2	2	1	3
22 Las Brisas 8	N/o Sunnyslope, E and W of Clearview along Marily Ct and McDonald Ct	Residential	11 Units	105	2	6	8	7	4	11
23 Santana Ranch	E/o Fairview Rd from Hillcrest to Sunnyslope	Net Trips		13,273	401	767	1,168	864	607	1,471
1,092 residential, 800 student elementary school										
65,000 sf commercial										
24 Fairview Corners Residential	N/E Corners of Fairview Rd and Airline Hwy	Single Family	220 Units	2,094	41	124	165	139	81	220
25 Creekside 5 & 6	Los Altos Dr, south of Hillcrest	Residential	14 Lots	133	3	8	11	9	5	14
26 Humboldt West	Southside/Airline	Residential	16 Lots	152	3	9	12	10	6	16
27 Easde	Southside/Airline	Residential	5 Lots	48	1	3	4	3	2	5
28 Don Marcus	Santa Ana Valley Road	Residential	4 Lots	38	1	2	3	3	1	4
29 VLM/Mendonsa	Santa Ana Valley Road	Residential	3 Lots	29	1	1	2	2	1	3
30 Chamber's Equestrian Center	SR 25 and Shore Rd	Horse Show		-	-	-	-	-	-	-

Appendix F

Intersection Level of Service Calculations

Background Conditions

Intersection	
Intersection Delay, s/veh	9.5
Intersection LOS	A

Movement	EBU	EBL	EBT	EBR	WBU	WBL	WBT	WBR	NBU	NBL	NBT	NBR
Vol, veh/h	0	30	14	8	0	7	10	64	0	6	181	27
Peak Hour Factor	0.92	0.83	0.83	0.83	0.92	0.83	0.83	0.83	0.92	0.83	0.83	0.83
Heavy Vehicles, %	2	12	12	12	2	4	4	4	2	3	3	3
Mvmt Flow	0	36	17	10	0	8	12	77	0	7	218	33
Number of Lanes	0	0	1	0	0	0	1	0	0	0	1	0

Approach	EB	WB	NB
Opposing Approach	WB	EB	SB
Opposing Lanes	1	1	1
Conflicting Approach Left	SB	NB	EB
Conflicting Lanes Left	1	1	1
Conflicting Approach Right	NB	SB	WB
Conflicting Lanes Right	1	1	1
HCM Control Delay	9	8.5	9.8
HCM LOS	A	A	A

Lane	NBLn1	EBLn1	WBLn1	SBLn1
Vol Left, %	3%	58%	9%	29%
Vol Thru, %	85%	27%	12%	66%
Vol Right, %	13%	15%	79%	5%
Sign Control	Stop	Stop	Stop	Stop
Traffic Vol by Lane	214	52	81	194
LT Vol	6	30	7	57
Through Vol	181	14	10	128
RT Vol	27	8	64	9
Lane Flow Rate	258	63	98	234
Geometry Grp	1	1	1	1
Degree of Util (X)	0.326	0.094	0.128	0.302
Departure Headway (Hd)	4.549	5.384	4.725	4.654
Convergence, Y/N	Yes	Yes	Yes	Yes
Cap	789	662	754	769
Service Time	2.592	3.447	2.782	2.699
HCM Lane V/C Ratio	0.327	0.095	0.13	0.304
HCM Control Delay	9.8	9	8.5	9.7
HCM Lane LOS	A	A	A	A
HCM 95th-tile Q	1.4	0.3	0.4	1.3

Intersection	
Intersection Delay, s/veh	
Intersection LOS	

Movement	SBU	SBL	SBT	SBR
Vol, veh/h	0	57	128	9
Peak Hour Factor	0.92	0.83	0.83	0.83
Heavy Vehicles, %	2	2	2	2
Mvmt Flow	0	69	154	11
Number of Lanes	0	0	1	0

Approach	SB
Opposing Approach	NB
Opposing Lanes	1
Conflicting Approach Left	WB
Conflicting Lanes Left	1
Conflicting Approach Right	EB
Conflicting Lanes Right	1
HCM Control Delay	9.7
HCM LOS	A

Lane

Intersection	
Int Delay, s/veh	7.8

Movement	EBL	EBT	EBR	WBL	WBT	WBR	NBL	NBT	NBR	SBL	SBT	SBR
Vol, veh/h	1	42	6	2	47	0	14	0	4	23	11	19
Conflicting Peds, #/hr	5	0	1	1	0	5	16	0	0	0	0	16
Sign Control	Stop	Stop	Stop	Stop	Stop	Stop	Free	Free	Free	Free	Free	Free
RT Channelized	-	-	None	-	-	None	-	-	None	-	-	None
Storage Length	-	-	-	-	-	-	-	-	-	-	-	-
Veh in Median Storage, #	-	0	-	-	0	-	-	0	-	-	0	-
Grade, %	-	0	-	-	0	-	-	0	-	-	0	-
Peak Hour Factor	67	67	67	67	67	67	67	67	67	67	67	67
Heavy Vehicles, %	2	2	2	2	2	2	2	2	2	2	2	2
Mvmt Flow	1	63	9	3	70	0	21	0	6	34	16	28

Major/Minor	Minor2			Minor1			Major1			Major2		
Conflicting Flow All	189	157	52	190	168	24	50	0	0	11	0	0
Stage 1	104	104	-	50	50	-	-	-	-	-	-	-
Stage 2	85	53	-	140	118	-	-	-	-	-	-	-
Critical Hdwy	7.12	6.52	6.22	7.12	6.52	6.22	4.12	-	-	4.12	-	-
Critical Hdwy Stg 1	6.12	5.52	-	6.12	5.52	-	-	-	-	-	-	-
Critical Hdwy Stg 2	6.12	5.52	-	6.12	5.52	-	-	-	-	-	-	-
Follow-up Hdwy	3.518	4.018	3.318	3.518	4.018	3.318	2.218	-	-	2.218	-	-
Pot Cap-1 Maneuver	771	735	1016	770	725	1052	1557	-	-	1608	-	-
Stage 1	902	809	-	963	853	-	-	-	-	-	-	-
Stage 2	923	851	-	863	798	-	-	-	-	-	-	-
Platoon blocked, %								-	-		-	-
Mov Cap-1 Maneuver	680	703	998	680	693	1034	1536	-	-	1587	-	-
Mov Cap-2 Maneuver	680	703	-	680	693	-	-	-	-	-	-	-
Stage 1	886	788	-	946	838	-	-	-	-	-	-	-
Stage 2	823	836	-	760	777	-	-	-	-	-	-	-

Approach	EB	WB	NB	SB
HCM Control Delay, s	10.5	10.8	5.7	3.2
HCM LOS	B	B		

Minor Lane/Major Mvmt	NBL	NBT	NBR	EBLn1	WBLn1	SBL	SBT	SBR
Capacity (veh/h)	1536	-	-	729	692	1587	-	-
HCM Lane V/C Ratio	0.014	-	-	0.1	0.106	0.022	-	-
HCM Control Delay (s)	7.4	0	-	10.5	10.8	7.3	0	-
HCM Lane LOS	A	A	-	B	B	A	A	-
HCM 95th %tile Q(veh)	0	-	-	0.3	0.4	0.1	-	-

Intersection	
Int Delay, s/veh	4.5

Movement	EBL	EBT	EBR	WBL	WBT	WBR	NBL	NBT	NBR	SBL	SBT	SBR
Vol, veh/h	30	35	11	10	22	10	7	85	5	6	93	14
Conflicting Peds, #/hr	3	0	14	14	0	3	5	0	2	2	0	5
Sign Control	Stop	Stop	Stop	Stop	Stop	Stop	Free	Free	Free	Free	Free	Free
RT Channelized	-	-	None	-	-	None	-	-	None	-	-	None
Storage Length	-	-	-	-	-	-	-	-	-	-	-	-
Veh in Median Storage, #	-	0	-	-	0	-	-	0	-	-	0	-
Grade, %	-	0	-	-	0	-	-	0	-	-	0	-
Peak Hour Factor	76	76	76	76	76	76	76	76	76	76	76	76
Heavy Vehicles, %	2	2	2	2	2	2	2	2	2	2	2	2
Mvmt Flow	39	46	14	13	29	13	9	112	7	8	122	18

Major/Minor	Minor2			Minor1			Major1			Major2		
Conflicting Flow All	330	312	151	340	319	134	155	0	0	132	0	0
Stage 1	161	161	-	148	148	-	-	-	-	-	-	-
Stage 2	169	151	-	192	171	-	-	-	-	-	-	-
Critical Hdwy	7.12	6.52	6.22	7.12	6.52	6.22	4.12	-	-	4.12	-	-
Critical Hdwy Stg 1	6.12	5.52	-	6.12	5.52	-	-	-	-	-	-	-
Critical Hdwy Stg 2	6.12	5.52	-	6.12	5.52	-	-	-	-	-	-	-
Follow-up Hdwy	3.518	4.018	3.318	3.518	4.018	3.318	2.218	-	-	2.218	-	-
Pot Cap-1 Maneuver	623	603	895	614	598	915	1425	-	-	1453	-	-
Stage 1	841	765	-	855	775	-	-	-	-	-	-	-
Stage 2	833	772	-	810	757	-	-	-	-	-	-	-
Platoon blocked, %								-	-		-	-
Mov Cap-1 Maneuver	575	581	881	553	577	901	1419	-	-	1447	-	-
Mov Cap-2 Maneuver	575	581	-	553	577	-	-	-	-	-	-	-
Stage 1	825	752	-	839	761	-	-	-	-	-	-	-
Stage 2	781	758	-	740	744	-	-	-	-	-	-	-

Approach	EB	WB	NB	SB
HCM Control Delay, s	12.1	11.3	0.5	0.4
HCM LOS	B	B		

Minor Lane/Major Mvmt	NBL	NBT	NBR	EBLn1	WBLn1	SBL	SBT	SBR
Capacity (veh/h)	1419	-	-	608	624	1447	-	-
HCM Lane V/C Ratio	0.006	-	-	0.164	0.089	0.005	-	-
HCM Control Delay (s)	7.6	0	-	12.1	11.3	7.5	0	-
HCM Lane LOS	A	A	-	B	B	A	A	-
HCM 95th %tile Q(veh)	0	-	-	0.6	0.3	0	-	-

Intersection	
Intersection Delay, s/veh	9.3
Intersection LOS	A

Movement	EBU	EBL	EBT	EBR	WBU	WBL	WBT	WBR	NBU	NBL	NBT	NBR
Vol, veh/h	0	18	3	8	0	4	5	37	0	9	166	9
Peak Hour Factor	0.92	0.91	0.91	0.91	0.92	0.91	0.91	0.91	0.92	0.91	0.91	0.91
Heavy Vehicles, %	2	2	2	2	2	2	2	2	2	2	2	2
Mvmt Flow	0	20	3	9	0	4	5	41	0	10	182	10
Number of Lanes	0	0	1	0	0	0	1	0	0	0	1	0

Approach	EB	WB	NB
Opposing Approach	WB	EB	SB
Opposing Lanes	1	1	1
Conflicting Approach Left	SB	NB	EB
Conflicting Lanes Left	1	1	1
Conflicting Approach Right	NB	SB	WB
Conflicting Lanes Right	1	1	1
HCM Control Delay	8.4	8	8.9
HCM LOS	A	A	A

Lane	NBLn1	EBLn1	WBLn1	SBLn1
Vol Left, %	5%	62%	9%	12%
Vol Thru, %	90%	10%	11%	79%
Vol Right, %	5%	28%	80%	9%
Sign Control	Stop	Stop	Stop	Stop
Traffic Vol by Lane	184	29	46	279
LT Vol	9	18	4	34
Through Vol	166	3	5	220
RT Vol	9	8	37	25
Lane Flow Rate	202	32	51	307
Geometry Grp	1	1	1	1
Degree of Util (X)	0.249	0.045	0.065	0.368
Departure Headway (Hd)	4.43	5.079	4.628	4.317
Convergence, Y/N	Yes	Yes	Yes	Yes
Cap	811	704	772	834
Service Time	2.453	3.116	2.664	2.338
HCM Lane V/C Ratio	0.249	0.045	0.066	0.368
HCM Control Delay	8.9	8.4	8	9.8
HCM Lane LOS	A	A	A	A
HCM 95th-tile Q	1	0.1	0.2	1.7

Intersection	
Intersection Delay, s/veh	
Intersection LOS	

Movement	SBU	SBL	SBT	SBR
Vol, veh/h	0	34	220	25
Peak Hour Factor	0.92	0.91	0.91	0.91
Heavy Vehicles, %	2	2	2	2
Mvmt Flow	0	37	242	27
Number of Lanes	0	0	1	0

Approach	SB
Opposing Approach	NB
Opposing Lanes	1
Conflicting Approach Left	WB
Conflicting Lanes Left	1
Conflicting Approach Right	EB
Conflicting Lanes Right	1
HCM Control Delay	9.8
HCM LOS	A

Lane

Intersection	
Int Delay, s/veh	6.7

Movement	EBL	EBT	EBR	WBL	WBT	WBR	NBL	NBT	NBR	SBL	SBT	SBR
Vol, veh/h	0	25	4	1	21	0	4	0	2	23	10	17
Conflicting Peds, #/hr	1	0	5	5	0	1	17	0	0	0	0	17
Sign Control	Stop	Stop	Stop	Stop	Stop	Stop	Free	Free	Free	Free	Free	Free
RT Channelized	-	-	None	-	-	None	-	-	None	-	-	None
Storage Length	-	-	-	-	-	-	-	-	-	-	-	-
Veh in Median Storage, #	-	0	-	-	0	-	-	0	-	-	0	-
Grade, %	-	0	-	-	0	-	-	0	-	-	0	-
Peak Hour Factor	67	67	67	67	67	67	67	67	67	67	67	67
Heavy Vehicles, %	2	2	2	2	2	2	2	2	2	2	2	2
Mvmt Flow	0	37	6	1	31	0	6	0	3	34	15	25

Major/Minor	Minor2			Minor1			Major1			Major2		
Conflicting Flow All	135	121	50	141	132	23	45	0	0	8	0	0
Stage 1	101	101	-	18	18	-	-	-	-	-	-	-
Stage 2	34	20	-	123	114	-	-	-	-	-	-	-
Critical Hdwy	7.12	6.52	6.22	7.12	6.52	6.22	4.12	-	-	4.12	-	-
Critical Hdwy Stg 1	6.12	5.52	-	6.12	5.52	-	-	-	-	-	-	-
Critical Hdwy Stg 2	6.12	5.52	-	6.12	5.52	-	-	-	-	-	-	-
Follow-up Hdwy	3.518	4.018	3.318	3.518	4.018	3.318	2.218	-	-	2.218	-	-
Pot Cap-1 Maneuver	836	769	1018	829	759	1054	1563	-	-	1612	-	-
Stage 1	905	811	-	1001	880	-	-	-	-	-	-	-
Stage 2	982	879	-	881	801	-	-	-	-	-	-	-
Platoon blocked, %								-	-		-	-
Mov Cap-1 Maneuver	778	743	999	763	733	1035	1541	-	-	1589	-	-
Mov Cap-2 Maneuver	778	743	-	763	733	-	-	-	-	-	-	-
Stage 1	898	790	-	993	873	-	-	-	-	-	-	-
Stage 2	930	872	-	804	780	-	-	-	-	-	-	-

Approach	EB	WB	NB	SB
HCM Control Delay, s	10	10.1	4.9	3.4
HCM LOS	B	B		

Minor Lane/Major Mvmt	NBL	NBT	NBR	EBLn1	WBLn1	SBL	SBT	SBR
Capacity (veh/h)	1541	-	-	770	734	1589	-	-
HCM Lane V/C Ratio	0.004	-	-	0.056	0.045	0.022	-	-
HCM Control Delay (s)	7.3	0	-	10	10.1	7.3	0	-
HCM Lane LOS	A	A	-	B	B	A	A	-
HCM 95th %tile Q(veh)	0	-	-	0.2	0.1	0.1	-	-

Intersection	
Int Delay, s/veh	2.5

Movement	EBL	EBT	EBR	WBL	WBT	WBR	NBL	NBT	NBR	SBL	SBT	SBR
Vol, veh/h	10	19	7	0	11	5	2	73	6	5	85	14
Conflicting Peds, #/hr	6	0	0	0	0	6	0	0	1	1	0	0
Sign Control	Stop	Stop	Stop	Stop	Stop	Stop	Free	Free	Free	Free	Free	Free
RT Channelized	-	-	None	-	-	None	-	-	None	-	-	None
Storage Length	-	-	-	-	-	-	-	-	-	-	-	-
Veh in Median Storage, #	-	0	-	-	0	-	-	0	-	-	0	-
Grade, %	-	0	-	-	0	-	-	0	-	-	0	-
Peak Hour Factor	76	76	76	76	76	76	76	76	76	76	76	76
Heavy Vehicles, %	2	2	2	2	2	2	2	2	2	2	2	2
Mvmt Flow	13	25	9	0	14	7	3	96	8	7	112	18

Major/Minor	Minor2			Minor1			Major1			Major2		
Conflicting Flow All	262	255	128	268	260	107	136	0	0	110	0	0
Stage 1	140	140	-	111	111	-	-	-	-	-	-	-
Stage 2	122	115	-	157	149	-	-	-	-	-	-	-
Critical Hdwy	7.12	6.52	6.22	7.12	6.52	6.22	4.12	-	-	4.12	-	-
Critical Hdwy Stg 1	6.12	5.52	-	6.12	5.52	-	-	-	-	-	-	-
Critical Hdwy Stg 2	6.12	5.52	-	6.12	5.52	-	-	-	-	-	-	-
Follow-up Hdwy	3.518	4.018	3.318	3.518	4.018	3.318	2.218	-	-	2.218	-	-
Pot Cap-1 Maneuver	691	649	922	685	645	947	1448	-	-	1480	-	-
Stage 1	863	781	-	894	804	-	-	-	-	-	-	-
Stage 2	882	800	-	845	774	-	-	-	-	-	-	-
Platoon blocked, %								-	-		-	-
Mov Cap-1 Maneuver	667	638	917	651	634	941	1447	-	-	1479	-	-
Mov Cap-2 Maneuver	667	638	-	651	634	-	-	-	-	-	-	-
Stage 1	857	773	-	888	798	-	-	-	-	-	-	-
Stage 2	858	794	-	805	766	-	-	-	-	-	-	-

Approach	EB	WB	NB	SB
HCM Control Delay, s	10.6	10.3	0.2	0.4
HCM LOS	B	B		

Minor Lane/Major Mvmt	NBL	NBT	NBR	EBLn1	WBLn1	SBL	SBT	SBR
Capacity (veh/h)	1447	-	-	687	706	1479	-	-
HCM Lane V/C Ratio	0.002	-	-	0.069	0.03	0.004	-	-
HCM Control Delay (s)	7.5	0	-	10.6	10.3	7.4	0	-
HCM Lane LOS	A	A	-	B	B	A	A	-
HCM 95th %tile Q(veh)	0	-	-	0.2	0.1	0	-	-

Intersection	
Intersection Delay, s/veh	7.6
Intersection LOS	A

Movement	EBU	EBL	EBT	EBR	WBU	WBL	WBT	WBR	NBU	NBL	NBT	NBR
Vol, veh/h	0	1	42	6	0	2	47	0	0	14	0	4
Peak Hour Factor	0.92	0.67	0.67	0.67	0.92	0.67	0.67	0.67	0.92	0.67	0.67	0.67
Heavy Vehicles, %	2	2	2	2	2	2	2	2	2	2	2	2
Mvmt Flow	0	1	63	9	0	3	70	0	0	21	0	6
Number of Lanes	0	0	1	0	0	0	1	0	0	0	1	0

Approach	EB	WB	NB
Opposing Approach	WB	EB	SB
Opposing Lanes	1	1	1
Conflicting Approach Left	SB	NB	EB
Conflicting Lanes Left	1	1	1
Conflicting Approach Right	NB	SB	WB
Conflicting Lanes Right	1	1	1
HCM Control Delay	7.6	7.6	7.5
HCM LOS	A	A	A

Lane	NBLn1	EBLn1	WBLn1	SBLn1
Vol Left, %	78%	2%	4%	43%
Vol Thru, %	0%	86%	96%	21%
Vol Right, %	22%	12%	0%	36%
Sign Control	Stop	Stop	Stop	Stop
Traffic Vol by Lane	18	49	49	53
LT Vol	14	1	2	23
Through Vol	0	42	47	11
RT Vol	4	6	0	19
Lane Flow Rate	27	73	73	79
Geometry Grp	1	1	1	1
Degree of Util (X)	0.032	0.083	0.085	0.09
Departure Headway (Hd)	4.271	4.104	4.182	4.079
Convergence, Y/N	Yes	Yes	Yes	Yes
Cap	826	863	848	867
Service Time	2.363	2.177	2.253	2.159
HCM Lane V/C Ratio	0.033	0.085	0.086	0.091
HCM Control Delay	7.5	7.6	7.6	7.6
HCM Lane LOS	A	A	A	A
HCM 95th-tile Q	0.1	0.3	0.3	0.3

Intersection	
Intersection Delay, s/veh	
Intersection LOS	

Movement	SBU	SBL	SBT	SBR
Vol, veh/h	0	23	11	19
Peak Hour Factor	0.92	0.67	0.67	0.67
Heavy Vehicles, %	2	2	2	2
Mvmt Flow	0	34	16	28
Number of Lanes	0	0	1	0

Approach	SB
Opposing Approach	NB
Opposing Lanes	1
Conflicting Approach Left	WB
Conflicting Lanes Left	1
Conflicting Approach Right	EB
Conflicting Lanes Right	1
HCM Control Delay	7.6
HCM LOS	A

Lane

Intersection	
Intersection Delay, s/veh	8.3
Intersection LOS	A

Movement	EBU	EBL	EBT	EBR	WBU	WBL	WBT	WBR	NBU	NBL	NBT	NBR
Vol, veh/h	0	30	35	11	0	10	22	10	0	7	85	5
Peak Hour Factor	0.92	0.76	0.76	0.76	0.92	0.76	0.76	0.76	0.92	0.76	0.76	0.76
Heavy Vehicles, %	2	2	2	2	2	2	2	2	2	2	2	2
Mvmt Flow	0	39	46	14	0	13	29	13	0	9	112	7
Number of Lanes	0	0	1	0	0	0	1	0	0	0	1	0

Approach	EB	WB	NB
Opposing Approach	WB	EB	SB
Opposing Lanes	1	1	1
Conflicting Approach Left	SB	NB	EB
Conflicting Lanes Left	1	1	1
Conflicting Approach Right	NB	SB	WB
Conflicting Lanes Right	1	1	1
HCM Control Delay	8.3	8	8.3
HCM LOS	A	A	A

Lane	NBLn1	EBLn1	WBLn1	SBLn1
Vol Left, %	7%	39%	24%	5%
Vol Thru, %	88%	46%	52%	82%
Vol Right, %	5%	14%	24%	12%
Sign Control	Stop	Stop	Stop	Stop
Traffic Vol by Lane	97	76	42	113
LT Vol	7	30	10	6
Through Vol	85	35	22	93
RT Vol	5	11	10	14
Lane Flow Rate	128	100	55	149
Geometry Grp	1	1	1	1
Degree of Util (X)	0.158	0.128	0.07	0.181
Departure Headway (Hd)	4.446	4.618	4.586	4.378
Convergence, Y/N	Yes	Yes	Yes	Yes
Cap	808	777	781	821
Service Time	2.467	2.642	2.612	2.399
HCM Lane V/C Ratio	0.158	0.129	0.07	0.181
HCM Control Delay	8.3	8.3	8	8.4
HCM Lane LOS	A	A	A	A
HCM 95th-tile Q	0.6	0.4	0.2	0.7

Intersection	
Intersection Delay, s/veh	
Intersection LOS	

Movement	SBU	SBL	SBT	SBR
Vol, veh/h	0	6	93	14
Peak Hour Factor	0.92	0.76	0.76	0.76
Heavy Vehicles, %	2	2	2	2
Mvmt Flow	0	8	122	18
Number of Lanes	0	0	1	0

Approach	SB
Opposing Approach	NB
Opposing Lanes	1
Conflicting Approach Left	WB
Conflicting Lanes Left	1
Conflicting Approach Right	EB
Conflicting Lanes Right	1
HCM Control Delay	8.4
HCM LOS	A

Lane

Intersection	
Intersection Delay, s/veh	7.3
Intersection LOS	A

Movement	EBU	EBL	EBT	EBR	WBU	WBL	WBT	WBR	NBU	NBL	NBT	NBR
Vol, veh/h	0	0	25	4	0	1	21	0	0	4	0	2
Peak Hour Factor	0.92	0.67	0.67	0.67	0.92	0.67	0.67	0.67	0.92	0.67	0.67	0.67
Heavy Vehicles, %	2	2	2	2	2	2	2	2	2	2	2	2
Mvmt Flow	0	0	37	6	0	1	31	0	0	6	0	3
Number of Lanes	0	0	1	0	0	0	1	0	0	0	1	0

Approach	EB	WB	NB
Opposing Approach	WB	EB	SB
Opposing Lanes	1	1	1
Conflicting Approach Left	SB	NB	EB
Conflicting Lanes Left	1	1	1
Conflicting Approach Right	NB	SB	WB
Conflicting Lanes Right	1	1	1
HCM Control Delay	7.3	7.3	7.1
HCM LOS	A	A	A

Lane	NBLn1	EBLn1	WBLn1	SBLn1
Vol Left, %	67%	0%	5%	46%
Vol Thru, %	0%	86%	95%	20%
Vol Right, %	33%	14%	0%	34%
Sign Control	Stop	Stop	Stop	Stop
Traffic Vol by Lane	6	29	22	50
LT Vol	4	0	1	23
Through Vol	0	25	21	10
RT Vol	2	4	0	17
Lane Flow Rate	9	43	33	75
Geometry Grp	1	1	1	1
Degree of Util (X)	0.01	0.048	0.038	0.082
Departure Headway (Hd)	4.055	4.021	4.121	3.959
Convergence, Y/N	Yes	Yes	Yes	Yes
Cap	877	886	865	901
Service Time	2.106	2.064	2.165	1.998
HCM Lane V/C Ratio	0.01	0.049	0.038	0.083
HCM Control Delay	7.1	7.3	7.3	7.4
HCM Lane LOS	A	A	A	A
HCM 95th-tile Q	0	0.2	0.1	0.3

Intersection	
Intersection Delay, s/veh	
Intersection LOS	

Movement	SBU	SBL	SBT	SBR
Vol, veh/h	0	23	10	17
Peak Hour Factor	0.92	0.67	0.67	0.67
Heavy Vehicles, %	2	2	2	2
Mvmt Flow	0	34	15	25
Number of Lanes	0	0	1	0

Approach	SB
Opposing Approach	NB
Opposing Lanes	1
Conflicting Approach Left	WB
Conflicting Lanes Left	1
Conflicting Approach Right	EB
Conflicting Lanes Right	1
HCM Control Delay	7.4
HCM LOS	A

Lane

Intersection	
Intersection Delay, s/veh	7.8
Intersection LOS	A

Movement	EBU	EBL	EBT	EBR	WBU	WBL	WBT	WBR	NBU	NBL	NBT	NBR
Vol, veh/h	0	10	19	7	0	0	11	5	0	2	73	6
Peak Hour Factor	0.92	0.76	0.76	0.76	0.92	0.76	0.76	0.76	0.92	0.76	0.76	0.76
Heavy Vehicles, %	2	2	2	2	2	2	2	2	2	2	2	2
Mvmt Flow	0	13	25	9	0	0	14	7	0	3	96	8
Number of Lanes	0	0	1	0	0	0	1	0	0	0	1	0

Approach	EB	WB	NB
Opposing Approach	WB	EB	SB
Opposing Lanes	1	1	1
Conflicting Approach Left	SB	NB	EB
Conflicting Lanes Left	1	1	1
Conflicting Approach Right	NB	SB	WB
Conflicting Lanes Right	1	1	1
HCM Control Delay	7.7	7.4	7.8
HCM LOS	A	A	A

Lane	NBLn1	EBLn1	WBLn1	SBLn1
Vol Left, %	2%	28%	0%	5%
Vol Thru, %	90%	53%	69%	82%
Vol Right, %	7%	19%	31%	13%
Sign Control	Stop	Stop	Stop	Stop
Traffic Vol by Lane	81	36	16	104
LT Vol	2	10	0	5
Through Vol	73	19	11	85
RT Vol	6	7	5	14
Lane Flow Rate	107	47	21	137
Geometry Grp	1	1	1	1
Degree of Util (X)	0.122	0.058	0.025	0.154
Departure Headway (Hd)	4.118	4.425	4.329	4.063
Convergence, Y/N	Yes	Yes	Yes	Yes
Cap	861	814	832	873
Service Time	2.19	2.425	2.33	2.131
HCM Lane V/C Ratio	0.124	0.058	0.025	0.157
HCM Control Delay	7.8	7.7	7.4	7.9
HCM Lane LOS	A	A	A	A
HCM 95th-tile Q	0.4	0.2	0.1	0.5

Intersection	
Intersection Delay, s/veh	
Intersection LOS	

Movement	SBU	SBL	SBT	SBR
Vol, veh/h	0	5	85	14
Peak Hour Factor	0.92	0.76	0.76	0.76
Heavy Vehicles, %	2	2	2	2
Mvmt Flow	0	7	112	18
Number of Lanes	0	0	1	0

Approach	SB
Opposing Approach	NB
Opposing Lanes	1
Conflicting Approach Left	WB
Conflicting Lanes Left	1
Conflicting Approach Right	EB
Conflicting Lanes Right	1
HCM Control Delay	7.9
HCM LOS	A

Lane

Appendix G

Intersection
Level of Service
Calculations

Background Plus Project
Conditions

Intersection	
Intersection Delay, s/veh	9.7
Intersection LOS	A

Movement	EBU	EBL	EBT	EBR	WBU	WBL	WBT	WBR	NBU	NBL	NBT	NBR
Vol, veh/h	0	30	14	8	0	14	10	76	0	6	181	29
Peak Hour Factor	0.92	0.83	0.83	0.83	0.92	0.83	0.83	0.83	0.92	0.83	0.83	0.83
Heavy Vehicles, %	2	12	12	12	2	4	4	4	2	3	3	3
Mvmt Flow	0	36	17	10	0	17	12	92	0	7	218	35
Number of Lanes	0	0	1	0	0	0	1	0	0	0	1	0

Approach	EB	WB	NB
Opposing Approach	WB	EB	SB
Opposing Lanes	1	1	1
Conflicting Approach Left	SB	NB	EB
Conflicting Lanes Left	1	1	1
Conflicting Approach Right	NB	SB	WB
Conflicting Lanes Right	1	1	1
HCM Control Delay	9.1	8.8	10
HCM LOS	A	A	A

Lane	NBLn1	EBLn1	WBLn1	SBLn1
Vol Left, %	3%	58%	14%	31%
Vol Thru, %	84%	27%	10%	65%
Vol Right, %	13%	15%	76%	5%
Sign Control	Stop	Stop	Stop	Stop
Traffic Vol by Lane	216	52	100	198
LT Vol	6	30	14	61
Through Vol	181	14	10	128
RT Vol	29	8	76	9
Lane Flow Rate	260	63	120	239
Geometry Grp	1	1	1	1
Degree of Util (X)	0.333	0.095	0.16	0.313
Departure Headway (Hd)	4.612	5.446	4.781	4.723
Convergence, Y/N	Yes	Yes	Yes	Yes
Cap	776	653	745	756
Service Time	2.665	3.519	2.845	2.777
HCM Lane V/C Ratio	0.335	0.096	0.161	0.316
HCM Control Delay	10	9.1	8.8	9.9
HCM Lane LOS	A	A	A	A
HCM 95th-tile Q	1.5	0.3	0.6	1.3

Intersection	
Intersection Delay, s/veh	
Intersection LOS	

Movement	SBU	SBL	SBT	SBR
Vol, veh/h	0	61	128	9
Peak Hour Factor	0.92	0.83	0.83	0.83
Heavy Vehicles, %	2	2	2	2
Mvmt Flow	0	73	154	11
Number of Lanes	0	0	1	0

Approach	SB
Opposing Approach	NB
Opposing Lanes	1
Conflicting Approach Left	WB
Conflicting Lanes Left	1
Conflicting Approach Right	EB
Conflicting Lanes Right	1
HCM Control Delay	9.9
HCM LOS	A

Lane

Intersection	
Int Delay, s/veh	6.9

Movement	EBL	EBT	EBR	WBL	WBT	WBR	NBL	NBT	NBR	SBL	SBT	SBR
Vol, veh/h	10	39	6	2	44	2	14	2	4	22	15	41
Conflicting Peds, #/hr	5	0	1	1	0	5	16	0	0	0	0	16
Sign Control	Stop	Stop	Stop	Stop	Stop	Stop	Free	Free	Free	Free	Free	Free
RT Channelized	-	-	None	-	-	None	-	-	None	-	-	None
Storage Length	-	-	-	-	-	-	-	-	-	-	-	-
Veh in Median Storage, #	-	0	-	-	0	-	-	0	-	-	0	-
Grade, %	-	0	-	-	0	-	-	0	-	-	0	-
Peak Hour Factor	67	67	67	67	67	67	67	67	67	67	67	67
Heavy Vehicles, %	2	2	2	2	2	2	2	2	2	2	2	2
Mvmt Flow	15	58	9	3	66	3	21	3	6	33	22	61

Major/Minor	Minor2			Minor1			Major1			Major2		
Conflicting Flow All	211	180	74	210	207	27	89	0	0	14	0	0
Stage 1	124	124	-	53	53	-	-	-	-	-	-	-
Stage 2	87	56	-	157	154	-	-	-	-	-	-	-
Critical Hdwy	7.12	6.52	6.22	7.12	6.52	6.22	4.12	-	-	4.12	-	-
Critical Hdwy Stg 1	6.12	5.52	-	6.12	5.52	-	-	-	-	-	-	-
Critical Hdwy Stg 2	6.12	5.52	-	6.12	5.52	-	-	-	-	-	-	-
Follow-up Hdwy	3.518	4.018	3.318	3.518	4.018	3.318	2.218	-	-	2.218	-	-
Pot Cap-1 Maneuver	746	714	988	747	690	1048	1506	-	-	1604	-	-
Stage 1	880	793	-	960	851	-	-	-	-	-	-	-
Stage 2	921	848	-	845	770	-	-	-	-	-	-	-
Platoon blocked, %								-	-		-	-
Mov Cap-1 Maneuver	657	683	971	662	660	1030	1486	-	-	1583	-	-
Mov Cap-2 Maneuver	657	683	-	662	660	-	-	-	-	-	-	-
Stage 1	864	772	-	943	836	-	-	-	-	-	-	-
Stage 2	823	833	-	747	750	-	-	-	-	-	-	-

Approach	EB	WB	NB	SB
HCM Control Delay, s	10.8	11	5.2	2.1
HCM LOS	B	B		

Minor Lane/Major Mvmt	NBL	NBT	NBR	EBLn1	WBLn1	SBL	SBT	SBR
Capacity (veh/h)	1486	-	-	701	670	1583	-	-
HCM Lane V/C Ratio	0.014	-	-	0.117	0.107	0.021	-	-
HCM Control Delay (s)	7.5	0	-	10.8	11	7.3	0	-
HCM Lane LOS	A	A	-	B	B	A	A	-
HCM 95th %tile Q(veh)	0	-	-	0.4	0.4	0.1	-	-

Intersection	
Int Delay, s/veh	4.6

Movement	EBL	EBT	EBR	WBL	WBT	WBR	NBL	NBT	NBR	SBL	SBT	SBR
Vol, veh/h	24	36	14	10	23	10	8	85	5	7	93	11
Conflicting Peds, #/hr	3	0	14	14	0	3	5	0	2	2	0	5
Sign Control	Stop	Stop	Stop	Stop	Stop	Stop	Free	Free	Free	Free	Free	Free
RT Channelized	-	-	None	-	-	None	-	-	None	-	-	None
Storage Length	-	-	-	-	-	-	-	-	-	-	-	-
Veh in Median Storage, #	-	0	-	-	0	-	-	0	-	-	0	-
Grade, %	-	0	-	-	0	-	-	0	-	-	0	-
Peak Hour Factor	76	76	76	76	76	76	76	76	76	76	76	76
Heavy Vehicles, %	2	2	2	2	2	2	2	2	2	2	2	2
Mvmt Flow	32	47	18	13	30	13	11	112	7	9	122	14

Major/Minor	Minor2			Minor1			Major1			Major2		
Conflicting Flow All	334	315	149	345	319	134	151	0	0	132	0	0
Stage 1	162	162	-	150	150	-	-	-	-	-	-	-
Stage 2	172	153	-	195	169	-	-	-	-	-	-	-
Critical Hdwy	7.12	6.52	6.22	7.12	6.52	6.22	4.12	-	-	4.12	-	-
Critical Hdwy Stg 1	6.12	5.52	-	6.12	5.52	-	-	-	-	-	-	-
Critical Hdwy Stg 2	6.12	5.52	-	6.12	5.52	-	-	-	-	-	-	-
Follow-up Hdwy	3.518	4.018	3.318	3.518	4.018	3.318	2.218	-	-	2.218	-	-
Pot Cap-1 Maneuver	620	601	898	609	598	915	1430	-	-	1453	-	-
Stage 1	840	764	-	853	773	-	-	-	-	-	-	-
Stage 2	830	771	-	807	759	-	-	-	-	-	-	-
Platoon blocked, %								-	-		-	-
Mov Cap-1 Maneuver	571	578	884	544	575	901	1424	-	-	1447	-	-
Mov Cap-2 Maneuver	571	578	-	544	575	-	-	-	-	-	-	-
Stage 1	824	750	-	836	758	-	-	-	-	-	-	-
Stage 2	776	756	-	732	745	-	-	-	-	-	-	-

Approach	EB	WB	NB	SB
HCM Control Delay, s	11.9	11.4	0.6	0.5
HCM LOS	B	B		

Minor Lane/Major Mvmt	NBL	NBT	NBR	EBLn1	WBLn1	SBL	SBT	SBR
Capacity (veh/h)	1424	-	-	616	619	1447	-	-
HCM Lane V/C Ratio	0.007	-	-	0.158	0.091	0.006	-	-
HCM Control Delay (s)	7.5	0	-	11.9	11.4	7.5	0	-
HCM Lane LOS	A	A	-	B	B	A	A	-
HCM 95th %tile Q(veh)	0	-	-	0.6	0.3	0	-	-

Intersection	
Intersection Delay, s/veh	9.5
Intersection LOS	A

Movement	EBU	EBL	EBT	EBR	WBU	WBL	WBT	WBR	NBU	NBL	NBT	NBR
Vol, veh/h	0	18	3	8	0	9	5	45	0	9	166	17
Peak Hour Factor	0.92	0.91	0.91	0.91	0.92	0.91	0.91	0.91	0.92	0.91	0.91	0.91
Heavy Vehicles, %	2	2	2	2	2	2	2	2	2	2	2	2
Mvmt Flow	0	20	3	9	0	10	5	49	0	10	182	19
Number of Lanes	0	0	1	0	0	0	1	0	0	0	1	0

Approach	EB	WB	NB
Opposing Approach	WB	EB	SB
Opposing Lanes	1	1	1
Conflicting Approach Left	SB	NB	EB
Conflicting Lanes Left	1	1	1
Conflicting Approach Right	NB	SB	WB
Conflicting Lanes Right	1	1	1
HCM Control Delay	8.5	8.2	9.1
HCM LOS	A	A	A

Lane	NBLn1	EBLn1	WBLn1	SBLn1
Vol Left, %	5%	62%	15%	16%
Vol Thru, %	86%	10%	8%	75%
Vol Right, %	9%	28%	76%	9%
Sign Control	Stop	Stop	Stop	Stop
Traffic Vol by Lane	192	29	59	293
LT Vol	9	18	9	48
Through Vol	166	3	5	220
RT Vol	17	8	45	25
Lane Flow Rate	211	32	65	322
Geometry Grp	1	1	1	1
Degree of Util (X)	0.262	0.046	0.085	0.392
Departure Headway (Hd)	4.467	5.161	4.727	4.378
Convergence, Y/N	Yes	Yes	Yes	Yes
Cap	804	692	756	821
Service Time	2.494	3.207	2.769	2.404
HCM Lane V/C Ratio	0.262	0.046	0.086	0.392
HCM Control Delay	9.1	8.5	8.2	10.2
HCM Lane LOS	A	A	A	B
HCM 95th-tile Q	1.1	0.1	0.3	1.9

Intersection	
Intersection Delay, s/veh	
Intersection LOS	

Movement	SBU	SBL	SBT	SBR
Vol, veh/h	0	48	220	25
Peak Hour Factor	0.92	0.91	0.91	0.91
Heavy Vehicles, %	2	2	2	2
Mvmt Flow	0	53	242	27
Number of Lanes	0	0	1	0

Approach	SB
Opposing Approach	NB
Opposing Lanes	1
Conflicting Approach Left	WB
Conflicting Lanes Left	1
Conflicting Approach Right	EB
Conflicting Lanes Right	1
HCM Control Delay	10.2
HCM LOS	B

Lane

Intersection	
Int Delay, s/veh	6.4

Movement	EBL	EBT	EBR	WBL	WBT	WBR	NBL	NBT	NBR	SBL	SBT	SBR
Vol, veh/h	23	24	4	1	19	5	4	4	2	24	13	32
Conflicting Peds, #/hr	1	0	5	5	0	1	17	0	0	0	0	17
Sign Control	Stop	Stop	Stop	Stop	Stop	Stop	Free	Free	Free	Free	Free	Free
RT Channelized	-	-	None	-	-	None	-	-	None	-	-	None
Storage Length	-	-	-	-	-	-	-	-	-	-	-	-
Veh in Median Storage, #	-	0	-	-	0	-	-	0	-	-	0	-
Grade, %	-	0	-	-	0	-	-	0	-	-	0	-
Peak Hour Factor	67	67	67	67	67	67	67	67	67	67	67	67
Heavy Vehicles, %	2	2	2	2	2	2	2	2	2	2	2	2
Mvmt Flow	34	36	6	1	28	7	6	6	3	36	19	48

Major/Minor	Minor2			Minor1			Major1			Major2		
Conflicting Flow All	162	146	65	165	168	29	72	0	0	14	0	0
Stage 1	120	120	-	24	24	-	-	-	-	-	-	-
Stage 2	42	26	-	141	144	-	-	-	-	-	-	-
Critical Hdwy	7.12	6.52	6.22	7.12	6.52	6.22	4.12	-	-	4.12	-	-
Critical Hdwy Stg 1	6.12	5.52	-	6.12	5.52	-	-	-	-	-	-	-
Critical Hdwy Stg 2	6.12	5.52	-	6.12	5.52	-	-	-	-	-	-	-
Follow-up Hdwy	3.518	4.018	3.318	3.518	4.018	3.318	2.218	-	-	2.218	-	-
Pot Cap-1 Maneuver	803	745	999	800	725	1046	1528	-	-	1604	-	-
Stage 1	884	796	-	994	875	-	-	-	-	-	-	-
Stage 2	972	874	-	862	778	-	-	-	-	-	-	-
Platoon blocked, %								-	-		-	-
Mov Cap-1 Maneuver	742	718	981	735	699	1027	1506	-	-	1581	-	-
Mov Cap-2 Maneuver	742	718	-	735	699	-	-	-	-	-	-	-
Stage 1	877	774	-	986	868	-	-	-	-	-	-	-
Stage 2	917	867	-	786	756	-	-	-	-	-	-	-

Approach	EB	WB	NB	SB
HCM Control Delay, s	10.4	10.1	3	2.5
HCM LOS	B	B		

Minor Lane/Major Mvmt	NBL	NBT	NBR	EBLn1	WBLn1	SBL	SBT	SBR
Capacity (veh/h)	1506	-	-	745	748	1581	-	-
HCM Lane V/C Ratio	0.004	-	-	0.102	0.05	0.023	-	-
HCM Control Delay (s)	7.4	0	-	10.4	10.1	7.3	0	-
HCM Lane LOS	A	A	-	B	B	A	A	-
HCM 95th %tile Q(veh)	0	-	-	0.3	0.2	0.1	-	-

Intersection	
Int Delay, s/veh	2.7

Movement	EBL	EBT	EBR	WBL	WBT	WBR	NBL	NBT	NBR	SBL	SBT	SBR
Vol, veh/h	7	20	9	0	12	6	6	73	6	7	84	12
Conflicting Peds, #/hr	6	0	0	0	0	6	0	0	1	1	0	0
Sign Control	Stop	Stop	Stop	Stop	Stop	Stop	Free	Free	Free	Free	Free	Free
RT Channelized	-	-	None	-	-	None	-	-	None	-	-	None
Storage Length	-	-	-	-	-	-	-	-	-	-	-	-
Veh in Median Storage, #	-	0	-	-	0	-	-	0	-	-	0	-
Grade, %	-	0	-	-	0	-	-	0	-	-	0	-
Peak Hour Factor	76	76	76	76	76	76	76	76	76	76	76	76
Heavy Vehicles, %	2	2	2	2	2	2	2	2	2	2	2	2
Mvmt Flow	9	26	12	0	16	8	8	96	8	9	111	16

Major/Minor	Minor2			Minor1			Major1			Major2		
Conflicting Flow All	277	269	125	284	273	107	132	0	0	110	0	0
Stage 1	143	143	-	122	122	-	-	-	-	-	-	-
Stage 2	134	126	-	162	151	-	-	-	-	-	-	-
Critical Hdwy	7.12	6.52	6.22	7.12	6.52	6.22	4.12	-	-	4.12	-	-
Critical Hdwy Stg 1	6.12	5.52	-	6.12	5.52	-	-	-	-	-	-	-
Critical Hdwy Stg 2	6.12	5.52	-	6.12	5.52	-	-	-	-	-	-	-
Follow-up Hdwy	3.518	4.018	3.318	3.518	4.018	3.318	2.218	-	-	2.218	-	-
Pot Cap-1 Maneuver	675	637	926	668	634	947	1453	-	-	1480	-	-
Stage 1	860	779	-	882	795	-	-	-	-	-	-	-
Stage 2	869	792	-	840	772	-	-	-	-	-	-	-
Platoon blocked, %								-	-		-	-
Mov Cap-1 Maneuver	646	622	921	628	620	941	1452	-	-	1479	-	-
Mov Cap-2 Maneuver	646	622	-	628	620	-	-	-	-	-	-	-
Stage 1	851	770	-	872	786	-	-	-	-	-	-	-
Stage 2	839	783	-	795	763	-	-	-	-	-	-	-

Approach	EB	WB	NB	SB
HCM Control Delay, s	10.7	10.3	0.5	0.5
HCM LOS	B	B		

Minor Lane/Major Mvmt	NBL	NBT	NBR	EBLn1	WBLn1	SBL	SBT	SBR
Capacity (veh/h)	1452	-	-	682	700	1479	-	-
HCM Lane V/C Ratio	0.005	-	-	0.069	0.034	0.006	-	-
HCM Control Delay (s)	7.5	0	-	10.7	10.3	7.4	0	-
HCM Lane LOS	A	A	-	B	B	A	A	-
HCM 95th %tile Q(veh)	0	-	-	0.2	0.1	0	-	-

Intersection	
Intersection Delay, s/veh	7.7
Intersection LOS	A

Movement	EBU	EBL	EBT	EBR	WBU	WBL	WBT	WBR	NBU	NBL	NBT	NBR
Vol, veh/h	0	10	39	6	0	2	44	2	0	14	2	4
Peak Hour Factor	0.92	0.67	0.67	0.67	0.92	0.67	0.67	0.67	0.92	0.67	0.67	0.67
Heavy Vehicles, %	2	2	2	2	2	2	2	2	2	2	2	2
Mvmt Flow	0	15	58	9	0	3	66	3	0	21	3	6
Number of Lanes	0	0	1	0	0	0	1	0	0	0	1	0

Approach	EB	WB	NB
Opposing Approach	WB	EB	SB
Opposing Lanes	1	1	1
Conflicting Approach Left	SB	NB	EB
Conflicting Lanes Left	1	1	1
Conflicting Approach Right	NB	SB	WB
Conflicting Lanes Right	1	1	1
HCM Control Delay	7.8	7.7	7.6
HCM LOS	A	A	A

Lane	NBLn1	EBLn1	WBLn1	SBLn1
Vol Left, %	70%	18%	4%	28%
Vol Thru, %	10%	71%	92%	19%
Vol Right, %	20%	11%	4%	53%
Sign Control	Stop	Stop	Stop	Stop
Traffic Vol by Lane	20	55	48	78
LT Vol	14	10	2	22
Through Vol	2	39	44	15
RT Vol	4	6	2	41
Lane Flow Rate	30	82	72	116
Geometry Grp	1	1	1	1
Degree of Util (X)	0.037	0.096	0.084	0.128
Departure Headway (Hd)	4.419	4.215	4.235	3.964
Convergence, Y/N	Yes	Yes	Yes	Yes
Cap	815	838	833	889
Service Time	2.419	2.301	2.325	2.055
HCM Lane V/C Ratio	0.037	0.098	0.086	0.13
HCM Control Delay	7.6	7.8	7.7	7.6
HCM Lane LOS	A	A	A	A
HCM 95th-tile Q	0.1	0.3	0.3	0.4

Intersection	
Intersection Delay, s/veh	
Intersection LOS	

Movement	SBU	SBL	SBT	SBR
Vol, veh/h	0	22	15	41
Peak Hour Factor	0.92	0.67	0.67	0.67
Heavy Vehicles, %	2	2	2	2
Mvmt Flow	0	33	22	61
Number of Lanes	0	0	1	0

Approach	SB
Opposing Approach	NB
Opposing Lanes	1
Conflicting Approach Left	WB
Conflicting Lanes Left	1
Conflicting Approach Right	EB
Conflicting Lanes Right	1
HCM Control Delay	7.6
HCM LOS	A

Lane

Intersection	
Intersection Delay, s/veh	8.3
Intersection LOS	A

Movement	EBU	EBL	EBT	EBR	WBU	WBL	WBT	WBR	NBU	NBL	NBT	NBR
Vol, veh/h	0	24	36	14	0	10	23	10	0	8	85	5
Peak Hour Factor	0.92	0.76	0.76	0.76	0.92	0.76	0.76	0.76	0.92	0.76	0.76	0.76
Heavy Vehicles, %	2	2	2	2	2	2	2	2	2	2	2	2
Mvmt Flow	0	32	47	18	0	13	30	13	0	11	112	7
Number of Lanes	0	0	1	0	0	0	1	0	0	0	1	0

Approach	EB	WB	NB
Opposing Approach	WB	EB	SB
Opposing Lanes	1	1	1
Conflicting Approach Left	SB	NB	EB
Conflicting Lanes Left	1	1	1
Conflicting Approach Right	NB	SB	WB
Conflicting Lanes Right	1	1	1
HCM Control Delay	8.2	8	8.3
HCM LOS	A	A	A

Lane	NBLn1	EBLn1	WBLn1	SBLn1
Vol Left, %	8%	32%	23%	6%
Vol Thru, %	87%	49%	53%	84%
Vol Right, %	5%	19%	23%	10%
Sign Control	Stop	Stop	Stop	Stop
Traffic Vol by Lane	98	74	43	111
LT Vol	8	24	10	7
Through Vol	85	36	23	93
RT Vol	5	14	10	11
Lane Flow Rate	129	97	57	146
Geometry Grp	1	1	1	1
Degree of Util (X)	0.159	0.124	0.072	0.178
Departure Headway (Hd)	4.442	4.577	4.582	4.392
Convergence, Y/N	Yes	Yes	Yes	Yes
Cap	809	784	782	818
Service Time	2.463	2.599	2.606	2.412
HCM Lane V/C Ratio	0.159	0.124	0.073	0.178
HCM Control Delay	8.3	8.2	8	8.4
HCM Lane LOS	A	A	A	A
HCM 95th-tile Q	0.6	0.4	0.2	0.6

Intersection	
Intersection Delay, s/veh	
Intersection LOS	

Movement	SBU	SBL	SBT	SBR
Vol, veh/h	0	7	93	11
Peak Hour Factor	0.92	0.76	0.76	0.76
Heavy Vehicles, %	2	2	2	2
Mvmt Flow	0	9	122	14
Number of Lanes	0	0	1	0

Approach	SB
Opposing Approach	NB
Opposing Lanes	1
Conflicting Approach Left	WB
Conflicting Lanes Left	1
Conflicting Approach Right	EB
Conflicting Lanes Right	1
HCM Control Delay	8.4
HCM LOS	A

Lane

Intersection	
Intersection Delay, s/veh	7.5
Intersection LOS	A

Movement	EBU	EBL	EBT	EBR	WBU	WBL	WBT	WBR	NBU	NBL	NBT	NBR
Vol, veh/h	0	23	24	4	0	1	19	5	0	4	4	2
Peak Hour Factor	0.92	0.67	0.67	0.67	0.92	0.67	0.67	0.67	0.92	0.67	0.67	0.67
Heavy Vehicles, %	2	2	2	2	2	2	2	2	2	2	2	2
Mvmt Flow	0	34	36	6	0	1	28	7	0	6	6	3
Number of Lanes	0	0	1	0	0	0	1	0	0	0	1	0

Approach	EB	WB	NB
Opposing Approach	WB	EB	SB
Opposing Lanes	1	1	1
Conflicting Approach Left	SB	NB	EB
Conflicting Lanes Left	1	1	1
Conflicting Approach Right	NB	SB	WB
Conflicting Lanes Right	1	1	1
HCM Control Delay	7.7	7.3	7.3
HCM LOS	A	A	A

Lane	NBLn1	EBLn1	WBLn1	SBLn1
Vol Left, %	40%	45%	4%	35%
Vol Thru, %	40%	47%	76%	19%
Vol Right, %	20%	8%	20%	46%
Sign Control	Stop	Stop	Stop	Stop
Traffic Vol by Lane	10	51	25	69
LT Vol	4	23	1	24
Through Vol	4	24	19	13
RT Vol	2	4	5	32
Lane Flow Rate	15	76	37	103
Geometry Grp	1	1	1	1
Degree of Util (X)	0.017	0.089	0.042	0.113
Departure Headway (Hd)	4.171	4.211	4.087	3.933
Convergence, Y/N	Yes	Yes	Yes	Yes
Cap	847	845	867	903
Service Time	2.249	2.268	2.155	1.994
HCM Lane V/C Ratio	0.018	0.09	0.043	0.114
HCM Control Delay	7.3	7.7	7.3	7.5
HCM Lane LOS	A	A	A	A
HCM 95th-tile Q	0.1	0.3	0.1	0.4

Intersection	
Intersection Delay, s/veh	
Intersection LOS	

Movement	SBU	SBL	SBT	SBR
Vol, veh/h	0	24	13	32
Peak Hour Factor	0.92	0.67	0.67	0.67
Heavy Vehicles, %	2	2	2	2
Mvmt Flow	0	36	19	48
Number of Lanes	0	0	1	0

Approach	SB
Opposing Approach	NB
Opposing Lanes	1
Conflicting Approach Left	WB
Conflicting Lanes Left	1
Conflicting Approach Right	EB
Conflicting Lanes Right	1
HCM Control Delay	7.5
HCM LOS	A

Lane

Intersection	
Intersection Delay, s/veh	7.8
Intersection LOS	A

Movement	EBU	EBL	EBT	EBR	WBU	WBL	WBT	WBR	NBU	NBL	NBT	NBR
Vol, veh/h	0	7	20	9	0	0	12	6	0	6	73	6
Peak Hour Factor	0.92	0.76	0.76	0.76	0.92	0.76	0.76	0.76	0.92	0.76	0.76	0.76
Heavy Vehicles, %	2	2	2	2	2	2	2	2	2	2	2	2
Mvmt Flow	0	9	26	12	0	0	16	8	0	8	96	8
Number of Lanes	0	0	1	0	0	0	1	0	0	0	1	0

Approach	EB	WB	NB
Opposing Approach	WB	EB	SB
Opposing Lanes	1	1	1
Conflicting Approach Left	SB	NB	EB
Conflicting Lanes Left	1	1	1
Conflicting Approach Right	NB	SB	WB
Conflicting Lanes Right	1	1	1
HCM Control Delay	7.7	7.5	7.8
HCM LOS	A	A	A

Lane	NBLn1	EBLn1	WBLn1	SBLn1
Vol Left, %	7%	19%	0%	7%
Vol Thru, %	86%	56%	67%	82%
Vol Right, %	7%	25%	33%	12%
Sign Control	Stop	Stop	Stop	Stop
Traffic Vol by Lane	85	36	18	103
LT Vol	6	7	0	7
Through Vol	73	20	12	84
RT Vol	6	9	6	12
Lane Flow Rate	112	47	24	136
Geometry Grp	1	1	1	1
Degree of Util (X)	0.128	0.058	0.028	0.154
Departure Headway (Hd)	4.132	4.389	4.327	4.086
Convergence, Y/N	Yes	Yes	Yes	Yes
Cap	858	821	832	867
Service Time	2.207	2.389	2.329	2.157
HCM Lane V/C Ratio	0.131	0.057	0.029	0.157
HCM Control Delay	7.8	7.7	7.5	7.9
HCM Lane LOS	A	A	A	A
HCM 95th-tile Q	0.4	0.2	0.1	0.5

Intersection	
Intersection Delay, s/veh	
Intersection LOS	

Movement	SBU	SBL	SBT	SBR
Vol, veh/h	0	7	84	12
Peak Hour Factor	0.92	0.76	0.76	0.76
Heavy Vehicles, %	2	2	2	2
Mvmt Flow	0	9	111	16
Number of Lanes	0	0	1	0

Approach	SB
Opposing Approach	NB
Opposing Lanes	1
Conflicting Approach Left	WB
Conflicting Lanes Left	1
Conflicting Approach Right	EB
Conflicting Lanes Right	1
HCM Control Delay	7.9
HCM LOS	A

Lane

Appendix H

Intersection
Level of Service
Calculations

Cumulative
Conditions

Intersection	
Intersection Delay, s/veh	12.7
Intersection LOS	B

Movement	EBU	EBL	EBT	EBR	WBU	WBL	WBT	WBR	NBU	NBL	NBT	NBR
Vol, veh/h	0	32	15	14	0	14	11	76	0	9	335	29
Peak Hour Factor	0.92	0.83	0.83	0.83	0.92	0.83	0.83	0.83	0.92	0.83	0.83	0.83
Heavy Vehicles, %	2	12	12	12	2	4	4	4	2	3	3	3
Mvmt Flow	0	39	18	17	0	17	13	92	0	11	404	35
Number of Lanes	0	0	1	0	0	0	1	0	0	0	1	0

Approach	EB	WB	NB
Opposing Approach	WB	EB	SB
Opposing Lanes	1	1	1
Conflicting Approach Left	SB	NB	EB
Conflicting Lanes Left	1	1	1
Conflicting Approach Right	NB	SB	WB
Conflicting Lanes Right	1	1	1
HCM Control Delay	10	9.7	14.8
HCM LOS	A	A	B

Lane	NBLn1	EBLn1	WBLn1	SBLn1
Vol Left, %	2%	52%	14%	27%
Vol Thru, %	90%	25%	11%	69%
Vol Right, %	8%	23%	75%	4%
Sign Control	Stop	Stop	Stop	Stop
Traffic Vol by Lane	373	61	101	229
LT Vol	9	32	14	61
Through Vol	335	15	11	158
RT Vol	29	14	76	10
Lane Flow Rate	449	73	122	276
Geometry Grp	1	1	1	1
Degree of Util (X)	0.596	0.125	0.185	0.393
Departure Headway (Hd)	4.89	6.107	5.483	5.128
Convergence, Y/N	Yes	Yes	Yes	Yes
Cap	742	589	656	704
Service Time	2.89	4.127	3.501	3.143
HCM Lane V/C Ratio	0.605	0.124	0.186	0.392
HCM Control Delay	14.8	10	9.7	11.4
HCM Lane LOS	B	A	A	B
HCM 95th-tile Q	4	0.4	0.7	1.9

Intersection	
Intersection Delay, s/veh	
Intersection LOS	

Movement	SBU	SBL	SBT	SBR
Vol, veh/h	0	61	158	10
Peak Hour Factor	0.92	0.83	0.83	0.83
Heavy Vehicles, %	2	2	2	2
Mvmt Flow	0	73	190	12
Number of Lanes	0	0	1	0

Approach	SB
Opposing Approach	NB
Opposing Lanes	1
Conflicting Approach Left	WB
Conflicting Lanes Left	1
Conflicting Approach Right	EB
Conflicting Lanes Right	1
HCM Control Delay	11.4
HCM LOS	B

Lane

Intersection	
Int Delay, s/veh	6.9

Movement	EBL	EBT	EBR	WBL	WBT	WBR	NBL	NBT	NBR	SBL	SBT	SBR
Vol, veh/h	10	39	6	2	44	2	14	2	4	22	15	41
Conflicting Peds, #/hr	5	0	1	1	0	5	16	0	0	0	0	16
Sign Control	Stop	Stop	Stop	Stop	Stop	Stop	Free	Free	Free	Free	Free	Free
RT Channelized	-	-	None	-	-	None	-	-	None	-	-	None
Storage Length	-	-	-	-	-	-	-	-	-	-	-	-
Veh in Median Storage, #	-	0	-	-	0	-	-	0	-	-	0	-
Grade, %	-	0	-	-	0	-	-	0	-	-	0	-
Peak Hour Factor	67	67	67	67	67	67	67	67	67	67	67	67
Heavy Vehicles, %	2	2	2	2	2	2	2	2	2	2	2	2
Mvmt Flow	15	58	9	3	66	3	21	3	6	33	22	61

Major/Minor	Minor2			Minor1			Major1			Major2		
Conflicting Flow All	211	180	74	210	207	27	89	0	0	14	0	0
Stage 1	124	124	-	53	53	-	-	-	-	-	-	-
Stage 2	87	56	-	157	154	-	-	-	-	-	-	-
Critical Hdwy	7.12	6.52	6.22	7.12	6.52	6.22	4.12	-	-	4.12	-	-
Critical Hdwy Stg 1	6.12	5.52	-	6.12	5.52	-	-	-	-	-	-	-
Critical Hdwy Stg 2	6.12	5.52	-	6.12	5.52	-	-	-	-	-	-	-
Follow-up Hdwy	3.518	4.018	3.318	3.518	4.018	3.318	2.218	-	-	2.218	-	-
Pot Cap-1 Maneuver	746	714	988	747	690	1048	1506	-	-	1604	-	-
Stage 1	880	793	-	960	851	-	-	-	-	-	-	-
Stage 2	921	848	-	845	770	-	-	-	-	-	-	-
Platoon blocked, %								-	-		-	-
Mov Cap-1 Maneuver	657	683	971	662	660	1030	1486	-	-	1583	-	-
Mov Cap-2 Maneuver	657	683	-	662	660	-	-	-	-	-	-	-
Stage 1	864	772	-	943	836	-	-	-	-	-	-	-
Stage 2	823	833	-	747	750	-	-	-	-	-	-	-

Approach	EB	WB	NB	SB
HCM Control Delay, s	10.8	11	5.2	2.1
HCM LOS	B	B		

Minor Lane/Major Mvmt	NBL	NBT	NBR	EBLn1	WBLn1	SBL	SBT	SBR
Capacity (veh/h)	1486	-	-	701	670	1583	-	-
HCM Lane V/C Ratio	0.014	-	-	0.117	0.107	0.021	-	-
HCM Control Delay (s)	7.5	0	-	10.8	11	7.3	0	-
HCM Lane LOS	A	A	-	B	B	A	A	-
HCM 95th %tile Q(veh)	0	-	-	0.4	0.4	0.1	-	-

Intersection	
Int Delay, s/veh	4.5

Movement	EBL	EBT	EBR	WBL	WBT	WBR	NBL	NBT	NBR	SBL	SBT	SBR
Vol, veh/h	24	36	14	10	23	10	8	90	5	7	98	11
Conflicting Peds, #/hr	3	0	14	14	0	3	5	0	2	2	0	5
Sign Control	Stop	Stop	Stop	Stop	Stop	Stop	Free	Free	Free	Free	Free	Free
RT Channelized	-	-	None	-	-	None	-	-	None	-	-	None
Storage Length	-	-	-	-	-	-	-	-	-	-	-	-
Veh in Median Storage, #	-	0	-	-	0	-	-	0	-	-	0	-
Grade, %	-	0	-	-	0	-	-	0	-	-	0	-
Peak Hour Factor	76	76	76	76	76	76	76	76	76	76	76	76
Heavy Vehicles, %	2	2	2	2	2	2	2	2	2	2	2	2
Mvmt Flow	32	47	18	13	30	13	11	118	7	9	129	14

Major/Minor	Minor2			Minor1			Major1			Major2		
Conflicting Flow All	347	329	155	359	333	141	157	0	0	139	0	0
Stage 1	169	169	-	157	157	-	-	-	-	-	-	-
Stage 2	178	160	-	202	176	-	-	-	-	-	-	-
Critical Hdwy	7.12	6.52	6.22	7.12	6.52	6.22	4.12	-	-	4.12	-	-
Critical Hdwy Stg 1	6.12	5.52	-	6.12	5.52	-	-	-	-	-	-	-
Critical Hdwy Stg 2	6.12	5.52	-	6.12	5.52	-	-	-	-	-	-	-
Follow-up Hdwy	3.518	4.018	3.318	3.518	4.018	3.318	2.218	-	-	2.218	-	-
Pot Cap-1 Maneuver	607	590	891	596	587	907	1423	-	-	1445	-	-
Stage 1	833	759	-	845	768	-	-	-	-	-	-	-
Stage 2	824	766	-	800	753	-	-	-	-	-	-	-
Platoon blocked, %								-	-		-	-
Mov Cap-1 Maneuver	558	568	877	532	565	893	1417	-	-	1439	-	-
Mov Cap-2 Maneuver	558	568	-	532	565	-	-	-	-	-	-	-
Stage 1	817	745	-	828	753	-	-	-	-	-	-	-
Stage 2	770	751	-	725	739	-	-	-	-	-	-	-

Approach	EB	WB	NB	SB
HCM Control Delay, s	12.1	11.5	0.6	0.5
HCM LOS	B	B		

Minor Lane/Major Mvmt	NBL	NBT	NBR	EBLn1	WBLn1	SBL	SBT	SBR
Capacity (veh/h)	1417	-	-	605	608	1439	-	-
HCM Lane V/C Ratio	0.007	-	-	0.161	0.093	0.006	-	-
HCM Control Delay (s)	7.6	0	-	12.1	11.5	7.5	0	-
HCM Lane LOS	A	A	-	B	B	A	A	-
HCM 95th %tile Q(veh)	0	-	-	0.6	0.3	0	-	-

Intersection	
Intersection Delay, s/veh	11.6
Intersection LOS	B

Movement	EBU	EBL	EBT	EBR	WBU	WBL	WBT	WBR	NBU	NBL	NBT	NBR
Vol, veh/h	0	21	5	16	0	9	7	45	0	15	260	17
Peak Hour Factor	0.92	0.91	0.91	0.91	0.92	0.91	0.91	0.91	0.92	0.91	0.91	0.91
Heavy Vehicles, %	2	2	2	2	2	2	2	2	2	2	2	2
Mvmt Flow	0	23	5	18	0	10	8	49	0	16	286	19
Number of Lanes	0	0	1	0	0	0	1	0	0	0	1	0

Approach	EB	WB	NB
Opposing Approach	WB	EB	SB
Opposing Lanes	1	1	1
Conflicting Approach Left	SB	NB	EB
Conflicting Lanes Left	1	1	1
Conflicting Approach Right	NB	SB	WB
Conflicting Lanes Right	1	1	1
HCM Control Delay	9.1	8.9	11
HCM LOS	A	A	B

Lane	NBLn1	EBLn1	WBLn1	SBLn1
Vol Left, %	5%	50%	15%	13%
Vol Thru, %	89%	12%	11%	80%
Vol Right, %	6%	38%	74%	7%
Sign Control	Stop	Stop	Stop	Stop
Traffic Vol by Lane	292	42	61	383
LT Vol	15	21	9	48
Through Vol	260	5	7	308
RT Vol	17	16	45	27
Lane Flow Rate	321	46	67	421
Geometry Grp	1	1	1	1
Degree of Util (X)	0.416	0.071	0.098	0.535
Departure Headway (Hd)	4.669	5.565	5.242	4.572
Convergence, Y/N	Yes	Yes	Yes	Yes
Cap	767	637	676	787
Service Time	2.724	3.657	3.329	2.623
HCM Lane V/C Ratio	0.419	0.072	0.099	0.535
HCM Control Delay	11	9.1	8.9	12.8
HCM Lane LOS	B	A	A	B
HCM 95th-tile Q	2.1	0.2	0.3	3.2

Intersection	
Intersection Delay, s/veh	
Intersection LOS	

Movement	SBU	SBL	SBT	SBR
Vol, veh/h	0	48	308	27
Peak Hour Factor	0.92	0.91	0.91	0.91
Heavy Vehicles, %	2	2	2	2
Mvmt Flow	0	53	338	30
Number of Lanes	0	0	1	0

Approach	SB
Opposing Approach	NB
Opposing Lanes	1
Conflicting Approach Left	WB
Conflicting Lanes Left	1
Conflicting Approach Right	EB
Conflicting Lanes Right	1
HCM Control Delay	12.8
HCM LOS	B

Lane

Intersection	
Int Delay, s/veh	6.4

Movement	EBL	EBT	EBR	WBL	WBT	WBR	NBL	NBT	NBR	SBL	SBT	SBR
Vol, veh/h	23	25	4	1	20	5	4	4	2	24	13	32
Conflicting Peds, #/hr	1	0	5	5	0	1	17	0	0	0	0	17
Sign Control	Stop	Stop	Stop	Stop	Stop	Stop	Free	Free	Free	Free	Free	Free
RT Channelized	-	-	None	-	-	None	-	-	None	-	-	None
Storage Length	-	-	-	-	-	-	-	-	-	-	-	-
Veh in Median Storage, #	-	0	-	-	0	-	-	0	-	-	0	-
Grade, %	-	0	-	-	0	-	-	0	-	-	0	-
Peak Hour Factor	67	67	67	67	67	67	67	67	67	67	67	67
Heavy Vehicles, %	2	2	2	2	2	2	2	2	2	2	2	2
Mvmt Flow	34	37	6	1	30	7	6	6	3	36	19	48

Major/Minor	Minor2			Minor1			Major1			Major2		
Conflicting Flow All	163	146	65	166	168	29	72	0	0	14	0	0
Stage 1	120	120	-	24	24	-	-	-	-	-	-	-
Stage 2	43	26	-	142	144	-	-	-	-	-	-	-
Critical Hdwy	7.12	6.52	6.22	7.12	6.52	6.22	4.12	-	-	4.12	-	-
Critical Hdwy Stg 1	6.12	5.52	-	6.12	5.52	-	-	-	-	-	-	-
Critical Hdwy Stg 2	6.12	5.52	-	6.12	5.52	-	-	-	-	-	-	-
Follow-up Hdwy	3.518	4.018	3.318	3.518	4.018	3.318	2.218	-	-	2.218	-	-
Pot Cap-1 Maneuver	802	745	999	798	725	1046	1528	-	-	1604	-	-
Stage 1	884	796	-	994	875	-	-	-	-	-	-	-
Stage 2	971	874	-	861	778	-	-	-	-	-	-	-
Platoon blocked, %								-	-		-	-
Mov Cap-1 Maneuver	740	718	981	732	699	1027	1506	-	-	1581	-	-
Mov Cap-2 Maneuver	740	718	-	732	699	-	-	-	-	-	-	-
Stage 1	877	774	-	986	868	-	-	-	-	-	-	-
Stage 2	914	867	-	784	756	-	-	-	-	-	-	-

Approach	EB	WB	NB	SB
HCM Control Delay, s	10.4	10.1	3	2.5
HCM LOS	B	B		

Minor Lane/Major Mvmt	NBL	NBT	NBR	EBLn1	WBLn1	SBL	SBT	SBR
Capacity (veh/h)	1506	-	-	743	746	1581	-	-
HCM Lane V/C Ratio	0.004	-	-	0.104	0.052	0.023	-	-
HCM Control Delay (s)	7.4	0	-	10.4	10.1	7.3	0	-
HCM Lane LOS	A	A	-	B	B	A	A	-
HCM 95th %tile Q(veh)	0	-	-	0.3	0.2	0.1	-	-

Intersection	
Int Delay, s/veh	2.7

Movement	EBL	EBT	EBR	WBL	WBT	WBR	NBL	NBT	NBR	SBL	SBT	SBR
Vol, veh/h	8	20	9	0	12	6	6	78	6	7	89	13
Conflicting Peds, #/hr	6	0	0	0	0	6	0	0	1	1	0	0
Sign Control	Stop	Stop	Stop	Stop	Stop	Stop	Free	Free	Free	Free	Free	Free
RT Channelized	-	-	None	-	-	None	-	-	None	-	-	None
Storage Length	-	-	-	-	-	-	-	-	-	-	-	-
Veh in Median Storage, #	-	0	-	-	0	-	-	0	-	-	0	-
Grade, %	-	0	-	-	0	-	-	0	-	-	0	-
Peak Hour Factor	76	76	76	76	76	76	76	76	76	76	76	76
Heavy Vehicles, %	2	2	2	2	2	2	2	2	2	2	2	2
Mvmt Flow	11	26	12	0	16	8	8	103	8	9	117	17

Major/Minor	Minor2			Minor1			Major1			Major2		
Conflicting Flow All	290	282	133	297	287	114	140	0	0	117	0	0
Stage 1	150	150	-	128	128	-	-	-	-	-	-	-
Stage 2	140	132	-	169	159	-	-	-	-	-	-	-
Critical Hdwy	7.12	6.52	6.22	7.12	6.52	6.22	4.12	-	-	4.12	-	-
Critical Hdwy Stg 1	6.12	5.52	-	6.12	5.52	-	-	-	-	-	-	-
Critical Hdwy Stg 2	6.12	5.52	-	6.12	5.52	-	-	-	-	-	-	-
Follow-up Hdwy	3.518	4.018	3.318	3.518	4.018	3.318	2.218	-	-	2.218	-	-
Pot Cap-1 Maneuver	662	627	916	655	623	939	1443	-	-	1471	-	-
Stage 1	853	773	-	876	790	-	-	-	-	-	-	-
Stage 2	863	787	-	833	766	-	-	-	-	-	-	-
Platoon blocked, %								-	-		-	-
Mov Cap-1 Maneuver	633	613	911	616	609	934	1442	-	-	1470	-	-
Mov Cap-2 Maneuver	633	613	-	616	609	-	-	-	-	-	-	-
Stage 1	844	764	-	866	781	-	-	-	-	-	-	-
Stage 2	833	778	-	788	757	-	-	-	-	-	-	-

Approach	EB	WB	NB	SB
HCM Control Delay, s	10.8	10.4	0.5	0.5
HCM LOS	B	B		

Minor Lane/Major Mvmt	NBL	NBT	NBR	EBLn1	WBLn1	SBL	SBT	SBR
Capacity (veh/h)	1442	-	-	671	689	1470	-	-
HCM Lane V/C Ratio	0.005	-	-	0.073	0.034	0.006	-	-
HCM Control Delay (s)	7.5	0	-	10.8	10.4	7.5	0	-
HCM Lane LOS	A	A	-	B	B	A	A	-
HCM 95th %tile Q(veh)	0	-	-	0.2	0.1	0	-	-

Intersection	
Intersection Delay, s/veh	7.7
Intersection LOS	A

Movement	EBU	EBL	EBT	EBR	WBU	WBL	WBT	WBR	NBU	NBL	NBT	NBR
Vol, veh/h	0	10	39	6	0	2	44	2	0	14	2	4
Peak Hour Factor	0.92	0.67	0.67	0.67	0.92	0.67	0.67	0.67	0.92	0.67	0.67	0.67
Heavy Vehicles, %	2	2	2	2	2	2	2	2	2	2	2	2
Mvmt Flow	0	15	58	9	0	3	66	3	0	21	3	6
Number of Lanes	0	0	1	0	0	0	1	0	0	0	1	0

Approach	EB	WB	NB
Opposing Approach	WB	EB	SB
Opposing Lanes	1	1	1
Conflicting Approach Left	SB	NB	EB
Conflicting Lanes Left	1	1	1
Conflicting Approach Right	NB	SB	WB
Conflicting Lanes Right	1	1	1
HCM Control Delay	7.8	7.7	7.6
HCM LOS	A	A	A

Lane	NBLn1	EBLn1	WBLn1	SBLn1
Vol Left, %	70%	18%	4%	28%
Vol Thru, %	10%	71%	92%	19%
Vol Right, %	20%	11%	4%	53%
Sign Control	Stop	Stop	Stop	Stop
Traffic Vol by Lane	20	55	48	78
LT Vol	14	10	2	22
Through Vol	2	39	44	15
RT Vol	4	6	2	41
Lane Flow Rate	30	82	72	116
Geometry Grp	1	1	1	1
Degree of Util (X)	0.037	0.096	0.084	0.128
Departure Headway (Hd)	4.419	4.215	4.235	3.964
Convergence, Y/N	Yes	Yes	Yes	Yes
Cap	815	838	833	889
Service Time	2.419	2.301	2.325	2.055
HCM Lane V/C Ratio	0.037	0.098	0.086	0.13
HCM Control Delay	7.6	7.8	7.7	7.6
HCM Lane LOS	A	A	A	A
HCM 95th-tile Q	0.1	0.3	0.3	0.4

Intersection	
Intersection Delay, s/veh	
Intersection LOS	

Movement	SBU	SBL	SBT	SBR
Vol, veh/h	0	22	15	41
Peak Hour Factor	0.92	0.67	0.67	0.67
Heavy Vehicles, %	2	2	2	2
Mvmt Flow	0	33	22	61
Number of Lanes	0	0	1	0

Approach	SB
Opposing Approach	NB
Opposing Lanes	1
Conflicting Approach Left	WB
Conflicting Lanes Left	1
Conflicting Approach Right	EB
Conflicting Lanes Right	1
HCM Control Delay	7.6
HCM LOS	A

Lane

Intersection	
Intersection Delay, s/veh	8.3
Intersection LOS	A

Movement	EBU	EBL	EBT	EBR	WBU	WBL	WBT	WBR	NBU	NBL	NBT	NBR
Vol, veh/h	0	24	36	14	0	10	23	10	0	8	90	5
Peak Hour Factor	0.92	0.76	0.76	0.76	0.92	0.76	0.76	0.76	0.92	0.76	0.76	0.76
Heavy Vehicles, %	2	2	2	2	2	2	2	2	2	2	2	2
Mvmt Flow	0	32	47	18	0	13	30	13	0	11	118	7
Number of Lanes	0	0	1	0	0	0	1	0	0	0	1	0

Approach	EB	WB	NB
Opposing Approach	WB	EB	SB
Opposing Lanes	1	1	1
Conflicting Approach Left	SB	NB	EB
Conflicting Lanes Left	1	1	1
Conflicting Approach Right	NB	SB	WB
Conflicting Lanes Right	1	1	1
HCM Control Delay	8.3	8	8.4
HCM LOS	A	A	A

Lane	NBLn1	EBLn1	WBLn1	SBLn1
Vol Left, %	8%	32%	23%	6%
Vol Thru, %	87%	49%	53%	84%
Vol Right, %	5%	19%	23%	9%
Sign Control	Stop	Stop	Stop	Stop
Traffic Vol by Lane	103	74	43	116
LT Vol	8	24	10	7
Through Vol	90	36	23	98
RT Vol	5	14	10	11
Lane Flow Rate	136	97	57	153
Geometry Grp	1	1	1	1
Degree of Util (X)	0.168	0.125	0.073	0.187
Departure Headway (Hd)	4.452	4.607	4.614	4.403
Convergence, Y/N	Yes	Yes	Yes	Yes
Cap	806	778	776	815
Service Time	2.476	2.634	2.642	2.427
HCM Lane V/C Ratio	0.169	0.125	0.073	0.188
HCM Control Delay	8.4	8.3	8	8.4
HCM Lane LOS	A	A	A	A
HCM 95th-tile Q	0.6	0.4	0.2	0.7

Intersection	
Intersection Delay, s/veh	
Intersection LOS	

Movement	SBU	SBL	SBT	SBR
Vol, veh/h	0	7	98	11
Peak Hour Factor	0.92	0.76	0.76	0.76
Heavy Vehicles, %	2	2	2	2
Mvmt Flow	0	9	129	14
Number of Lanes	0	0	1	0

Approach	SB
Opposing Approach	NB
Opposing Lanes	1
Conflicting Approach Left	WB
Conflicting Lanes Left	1
Conflicting Approach Right	EB
Conflicting Lanes Right	1
HCM Control Delay	8.4
HCM LOS	A

Lane

Intersection	
Intersection Delay, s/veh	7.5
Intersection LOS	A

Movement	EBU	EBL	EBT	EBR	WBU	WBL	WBT	WBR	NBU	NBL	NBT	NBR
Vol, veh/h	0	23	25	4	0	1	20	5	0	4	4	2
Peak Hour Factor	0.92	0.67	0.67	0.67	0.92	0.67	0.67	0.67	0.92	0.67	0.67	0.67
Heavy Vehicles, %	2	2	2	2	2	2	2	2	2	2	2	2
Mvmt Flow	0	34	37	6	0	1	30	7	0	6	6	3
Number of Lanes	0	0	1	0	0	0	1	0	0	0	1	0

Approach	EB	WB	NB
Opposing Approach	WB	EB	SB
Opposing Lanes	1	1	1
Conflicting Approach Left	SB	NB	EB
Conflicting Lanes Left	1	1	1
Conflicting Approach Right	NB	SB	WB
Conflicting Lanes Right	1	1	1
HCM Control Delay	7.7	7.4	7.3
HCM LOS	A	A	A

Lane	NBLn1	EBLn1	WBLn1	SBLn1
Vol Left, %	40%	44%	4%	35%
Vol Thru, %	40%	48%	77%	19%
Vol Right, %	20%	8%	19%	46%
Sign Control	Stop	Stop	Stop	Stop
Traffic Vol by Lane	10	52	26	69
LT Vol	4	23	1	24
Through Vol	4	25	20	13
RT Vol	2	4	5	32
Lane Flow Rate	15	78	39	103
Geometry Grp	1	1	1	1
Degree of Util (X)	0.017	0.091	0.044	0.113
Departure Headway (Hd)	4.175	4.211	4.092	3.937
Convergence, Y/N	Yes	Yes	Yes	Yes
Cap	846	844	866	901
Service Time	2.257	2.269	2.161	2.002
HCM Lane V/C Ratio	0.018	0.092	0.045	0.114
HCM Control Delay	7.3	7.7	7.4	7.5
HCM Lane LOS	A	A	A	A
HCM 95th-tile Q	0.1	0.3	0.1	0.4

Intersection	
Intersection Delay, s/veh	
Intersection LOS	

Movement	SBU	SBL	SBT	SBR
Vol, veh/h	0	24	13	32
Peak Hour Factor	0.92	0.67	0.67	0.67
Heavy Vehicles, %	2	2	2	2
Mvmt Flow	0	36	19	48
Number of Lanes	0	0	1	0

Approach	SB
Opposing Approach	NB
Opposing Lanes	1
Conflicting Approach Left	WB
Conflicting Lanes Left	1
Conflicting Approach Right	EB
Conflicting Lanes Right	1
HCM Control Delay	7.5
HCM LOS	A

Lane

Intersection	
Intersection Delay, s/veh	7.9
Intersection LOS	A

Movement	EBU	EBL	EBT	EBR	WBU	WBL	WBT	WBR	NBU	NBL	NBT	NBR
Vol, veh/h	0	8	20	9	0	0	12	6	0	6	78	6
Peak Hour Factor	0.92	0.76	0.76	0.76	0.92	0.76	0.76	0.76	0.92	0.76	0.76	0.76
Heavy Vehicles, %	2	2	2	2	2	2	2	2	2	2	2	2
Mvmt Flow	0	11	26	12	0	0	16	8	0	8	103	8
Number of Lanes	0	0	1	0	0	0	1	0	0	0	1	0

Approach	EB	WB	NB
Opposing Approach	WB	EB	SB
Opposing Lanes	1	1	1
Conflicting Approach Left	SB	NB	EB
Conflicting Lanes Left	1	1	1
Conflicting Approach Right	NB	SB	WB
Conflicting Lanes Right	1	1	1
HCM Control Delay	7.7	7.5	7.9
HCM LOS	A	A	A

Lane	NBLn1	EBLn1	WBLn1	SBLn1
Vol Left, %	7%	22%	0%	6%
Vol Thru, %	87%	54%	67%	82%
Vol Right, %	7%	24%	33%	12%
Sign Control	Stop	Stop	Stop	Stop
Traffic Vol by Lane	90	37	18	109
LT Vol	6	8	0	7
Through Vol	78	20	12	89
RT Vol	6	9	6	13
Lane Flow Rate	118	49	24	143
Geometry Grp	1	1	1	1
Degree of Util (X)	0.136	0.06	0.029	0.163
Departure Headway (Hd)	4.142	4.429	4.361	4.09
Convergence, Y/N	Yes	Yes	Yes	Yes
Cap	854	814	825	866
Service Time	2.223	2.43	2.363	2.167
HCM Lane V/C Ratio	0.138	0.06	0.029	0.165
HCM Control Delay	7.9	7.7	7.5	8
HCM Lane LOS	A	A	A	A
HCM 95th-tile Q	0.5	0.2	0.1	0.6

Intersection	
Intersection Delay, s/veh	
Intersection LOS	

Movement	SBU	SBL	SBT	SBR
Vol, veh/h	0	7	89	13
Peak Hour Factor	0.92	0.76	0.76	0.76
Heavy Vehicles, %	2	2	2	2
Mvmt Flow	0	9	117	17
Number of Lanes	0	0	1	0

Approach	SB
Opposing Approach	NB
Opposing Lanes	1
Conflicting Approach Left	WB
Conflicting Lanes Left	1
Conflicting Approach Right	EB
Conflicting Lanes Right	1
HCM Control Delay	8
HCM LOS	A

Lane

Appendix I

Warrant Worksheets

Warrant 2 - Four-Hour Volume (Urban)

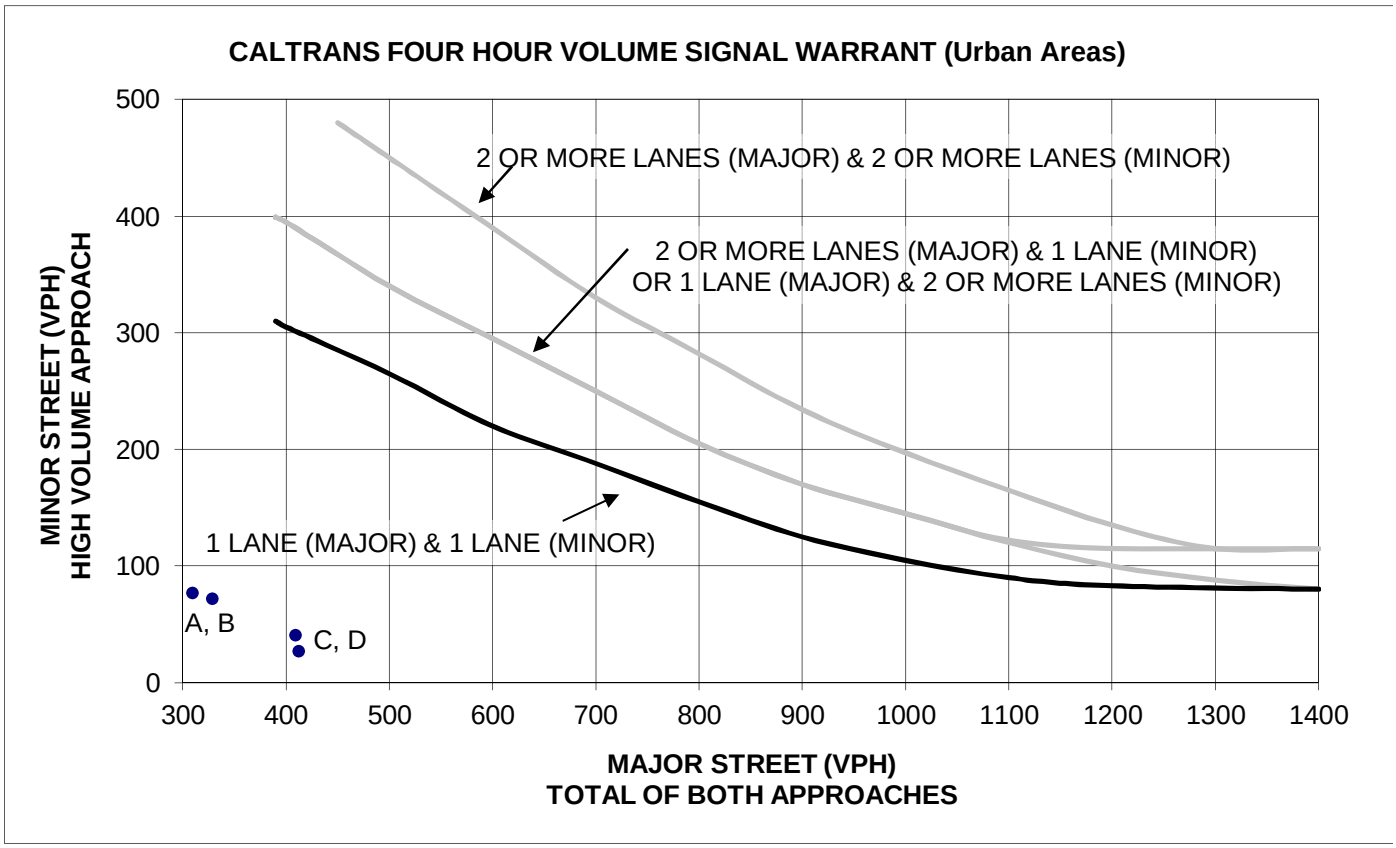

Scenario	Westside	Apricot	Warrant
	North/South	East/West	Met?
A. 7:00 - 8:00 AM	328	72	No
B. 8:00 - 9:00 AM	309	77	No
C. 4:00 - 5:00 PM	409	41	No
D. 5:00 - 6:00 PM	412	27	No

Notes:

1. 115 VPH applies as the lower threshold volume for a minor street approach with two or more lanes and 80 VPH applies as the lower threshold volume for a minor street approaching with one lane.

2. Bold line applies to intersection geometry.

Warrant 3A - Peak-Hour Volume (Urban)

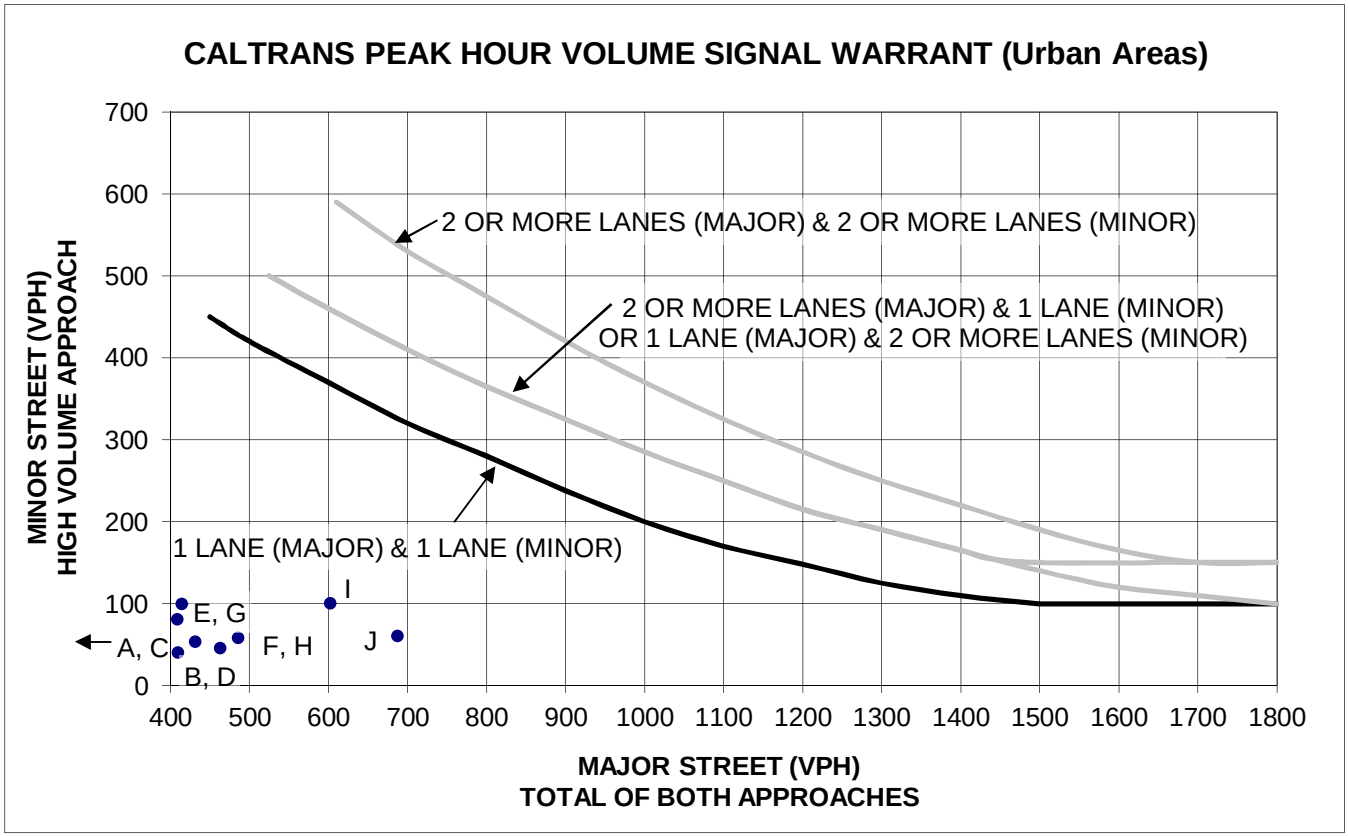

Scenario	Westside North/South	Apricot East/West	Warrant Met?
A. Exist AM	364	77	No
B. Exist PM	409	41	No
C. Ex+Pro AM	370	96	No
D. Ex+Pro PM	431	54	No
E. Bkgnd AM	408	81	No
F. Bkgnd PM	463	46	No
G. Bk+Pro AM	414	100	No
H. Bk+Pro PM	485	59	No
I. Cumult AM	602	101	No
J. Cumult PM	687	61	No

Notes:

1. 150 VPH applies as the lower threshold volume for a minor street approach with two or more lanes and 100 VPH applies as the lower threshold volume for a minor street approaching with one lane.

2. Bold line applies to intersection geometry.

Warrant 3B - Peak-Hour Delay (Urban)

Warrant 3 (Part B) - Peak Hour Delay
Westside Blvd. / Apricot Ln.

Number of Approaches to Intersection:		4 approaches	**Minimum Entering Vehicles:**		**800**
Total Entering Volumes:	Existing AM:	486 vehicles	Bk+Pro AM:	566 vehicles	
	Existing PM:	474 vehicles	Bk+Pro PM:	573 vehicles	
	Ex+Pro AM:	511 vehicles	Cumult AM:	764 vehicles	
	Ex+Pro PM:	509 vehicles	Cumult PM:	790 vehicles	
	Bkgnd AM:	541 vehicles			
	Bkgnd PM:	538 vehicles			

Street	Direction	Scenario	Peak Hour	No. of Stopped Vehicles	Average Vehicle Delay (sec)	Total Vehicle Delay (sec)	Total Delay (hours)	Min. 4 Veh-Hrs of Delay? (Approach)	At least 100 Veh? (Approach)	At least 800 Veh? (Intersection)	Warrant Met?
Apricot	EB	Existing	AM	45	8.8	396	0.11	NO	NO	NO	**NO**
Apricot	WB	Existing	AM	77	8.2	631	0.18	NO	NO	NO	**NO**
Apricot	EB	Existing	PM	24	8.2	197	0.05	NO	NO	NO	**NO**
Apricot	WB	Existing	PM	41	7.7	316	0.09	NO	NO	NO	**NO**
Apricot	EB	Ex+Pro	AM	45	8.9	401	0.11	NO	NO	NO	**NO**
Apricot	WB	Ex+Pro	AM	96	8.5	816	0.23	NO	NO	NO	**NO**
Apricot	EB	Ex+Pro	PM	24	8.3	199	0.06	NO	NO	NO	**NO**
Apricot	WB	Ex+Pro	PM	54	8.0	432	0.12	NO	NO	NO	**NO**
Apricot	EB	Bkgnd	AM	52	9.0	468	0.13	NO	NO	NO	**NO**
Apricot	WB	Bkgnd	AM	81	8.5	689	0.19	NO	NO	NO	**NO**
Apricot	EB	Bkgnd	PM	29	8.4	244	0.07	NO	NO	NO	**NO**
Apricot	WB	Bkgnd	PM	46	8.0	368	0.10	NO	NO	NO	**NO**
Apricot	EB	Bk+Pro	AM	52	9.1	473	0.13	NO	NO	NO	**NO**
Apricot	WB	Bk+Pro	AM	100	8.8	880	0.24	NO	Yes	NO	**NO**
Apricot	EB	Bk+Pro	PM	29	8.5	247	0.07	NO	NO	NO	**NO**
Apricot	WB	Bk+Pro	PM	59	8.2	484	0.13	NO	NO	NO	**NO**
Apricot	EB	Cumult.	AM	61	10.0	610	0.17	NO	NO	NO	**NO**
Apricot	WB	Cumult.	AM	101	9.7	980	0.27	NO	Yes	NO	**NO**
Apricot	EB	Cumult.	PM	42	9.1	382	0.11	NO	NO	NO	**NO**
Apricot	WB	Cumult.	PM	61	8.9	543	0.15	NO	NO	NO	**NO**

Notes:
1. Warrant based on level of service calculations. PM peak hour average approach delays are estimated.
2. Cumult. = Cumulative

Hatch Mott MacDonald

All-Way Stop Warrant
348654 - Homestead Ave. TIA

Existing Plus Project Conditions
Homestead Avenue / Apricot Lane - A Street

Major Street Approach: **Homestead Avenue**
≥300 vph 80% = 240
Minor Street Approach: Apricot Lane - A Street
≥200 vph 80% = 160

		Homestead Avenue			Apricot Lane - A Street			80% met?	
Hour		from N	from S	Both	from E	from W	Both	Homestead	Apricot - A
1	AM Peak	78	20	98	47	52	99	No	No
2	PM Peak	69	10	79	22	49	71	No	No
3	N/A								
4	N/A								
5	N/A								
6	N/A								
7	N/A								
8	N/A								
Average				88.5			85		

All-Way Stop Warrant
348654 - Homestead Ave. TIA

Background Plus Project Conditions
Homestead Avenue / Apricot Lane - A Street

Major Street Approach: **Homestead Avenue**
≥300 vph 80% = 240
Minor Street Approach: Apricot Lane - A Street
≥200 vph 80% = 160

		Homestead Avenue			Apricot Lane - A Street			80% met?	
Hour		from N	from S	Both	from E	from W	Both	Homestead	Apricot - A
1	AM Peak	78	20	98	48	55	103	No	No
2	PM Peak	69	10	79	25	51	76	No	No
3	N/A								
4	N/A								
5	N/A								
6	N/A								
7	N/A								
8	N/A								
Average				88.5			89.5		

All-Way Stop Warrant
348654 - Homestead Ave. TIA

Cumulative Conditions
Homestead Avenue / Apricot Lane - A Street

Major Street Approach: **Homestead Avenue**
≥300 vph 80% = 240
Minor Street Approach: Apricot Lane - A Street
≥200 uph 80% = 160

Hour		Homestead Avenue			Apricot Lane - A Street			80% met?	
		from N	from S	Both	from E	from W	Both	Chruch	8th
1	AM Peak	78	20	98	48	55	103	No	No
2	PM Peak	69	8	77	26	52	78	No	No
3	N/A								
4	N/A								
5	N/A								
6	N/A								
7	N/A								
8	N/A								
Average				87.5			90.5		

All-Way Stop Warrant
348654 - Homestead Ave. TIA

Existing Plus Project Conditions
Powell Street / A Street

Major Street Approach: **Powell Street**
≥300 vph 80% = 240
Minor Street Approach:
≥200 vph 80% = 160

Hour		Powell Street			A Street			80% met?	
		from N	from S	Both	from E	from W	Both	Powell	A
1	AM Peak	110	98	208	43	71	114	No	No
2	PM Peak	100	85	185	18	34	52	No	No
3	N/A								
4	N/A								
5	N/A								
6	N/A								
7	N/A								
8									
Average				196.5			83		

All-Way Stop Warrant
348654 - Homestead Ave. TIA

Background Plus Project Conditions
Powell Street / A Street

Major Street Approach: **Powell Street**
≥300 vph 80% = 240
Minor Street Approach:
≥200 vph 80% = 160

Hour		Powell Street			A Street			80% met?	
		from N	from S	Both	from E	from W	Both	Powell	A
1	AM Peak	111	98	209	43	74	117	No	No
2	PM Peak	103	85	188	18	36	54	No	No
3	N/A								
4	N/A								
5	N/A								
6	N/A								
7	N/A								
8	N/A								
Average				198.5			85.5		

All-Way Stop Warrant
348654 - Homestead Ave. TIA

Cumulative Conditions
Powell Street / A Street

Major Street Approach: **Powell Street**
≥300 vph 80% = 240
Minor Street Approach: A Street
≥200 uph 80% = 160

Hour		Powell Street			A Street			80% met?	
		from N	from S	Both	from E	from W	Both	Chruch	8th
1	AM Peak	116	103	219	43	74	117	No	No
2	PM Peak	109	90	199	18	37	55	No	No
3	N/A								
4	N/A								
5	N/A								
6	N/A								
7	N/A								
8	N/A								
Average				209			86		