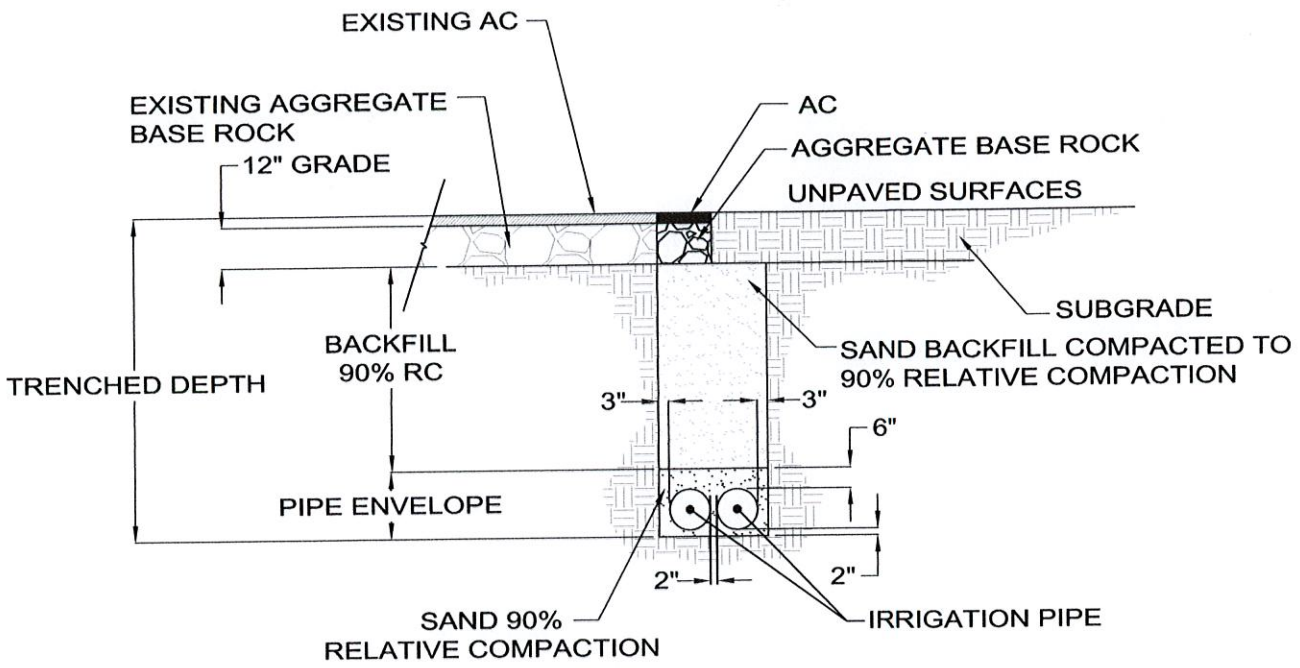

SECTION

SCALE: NONE

IRRIGATION TRENCH DEPTH		
NORMINAL PIPE SIZE	ROADWAY	NON ROADWAY
MAIN LINE	36"	24"
LATERALS	12"	12"
ELECTRICAL CONDUIT / DIRECT BURIED WIRING	36"	24"

NOTES:

1. SAND BEDDING & BACKFILLING MINIMUM SAND EQUIVALENT OF 30.

TITLE: IRRIGATION PIPE BEDDING AND TRENCH / BACKFILL

DRAWN BY: LOUIE C. GUEVARA	SCALE:	APPROVED:	STANDARD PLAN
REVIEWED BY: DAVID RUBCIC	REVISED: OCTOBER, 2013	CITY ENGINEER: DAVID RUBCIC LIC. NO. 57601 EXP. DATE: 12-31-2013 — DATE: 12-20-13	G-1
CITY OF HOLLISTER ENGINEERING DEPARTMENT			SHEET 1 OF 1