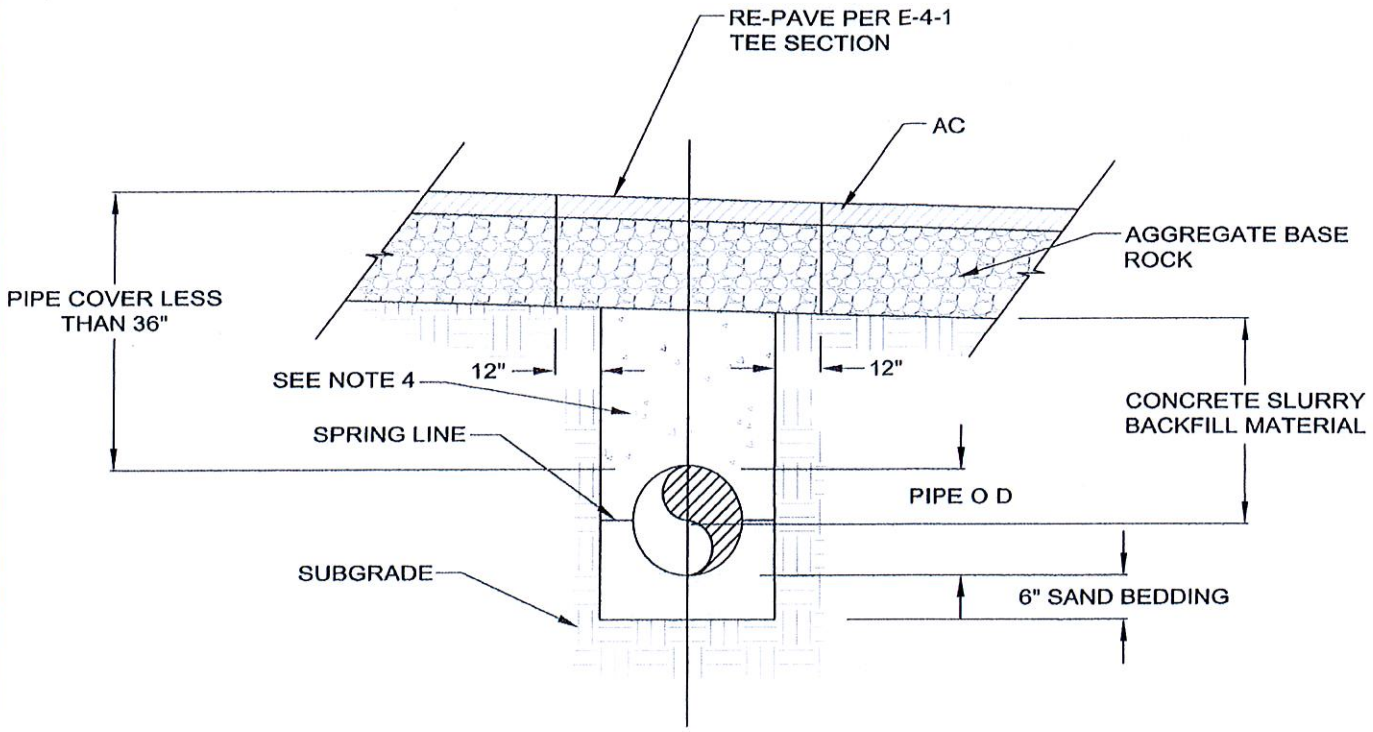

NOTES:

1. USE R.C.P. CLASS V FOR STORM DRAIN PIPE.
2. USE P.V.C. PIPE C-900 CLASS 200 FOR WATER PIPE.
3. USE P.V.C. PIPE SDR 23.5 FOR SEWER PIPE.
4. CONCRETE SLURRY BACKFILL IS CLASS 100-E-100 PCC AND CURED AT LEAST 24 HOURS PRIOR TO PAVING.

TITLE:

PIPE PROTECTION FOR SHALLOW PIPES FOR STORM, SEWER & WATER

DRAWN BY: LOUIE C. GUEVARA	SCALE: NONE	APPROVED:	STANDARD PLAN
REVIEWED BY: DAVID RUBCIC	REVISED: APRIL, 2013	7-16-13	E-6
CITY OF HOLLISTER ENGINEERING DEPARTMENT		CITY ENGINEER: RUDI GOLNIK LIC. NO. 39570 EXP. DATE: 12-31-2013 — DATE	SHEET 1 OF 1