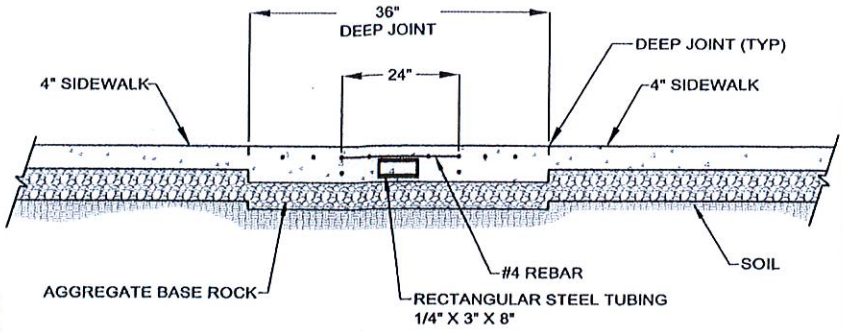


SECTION Y-Y

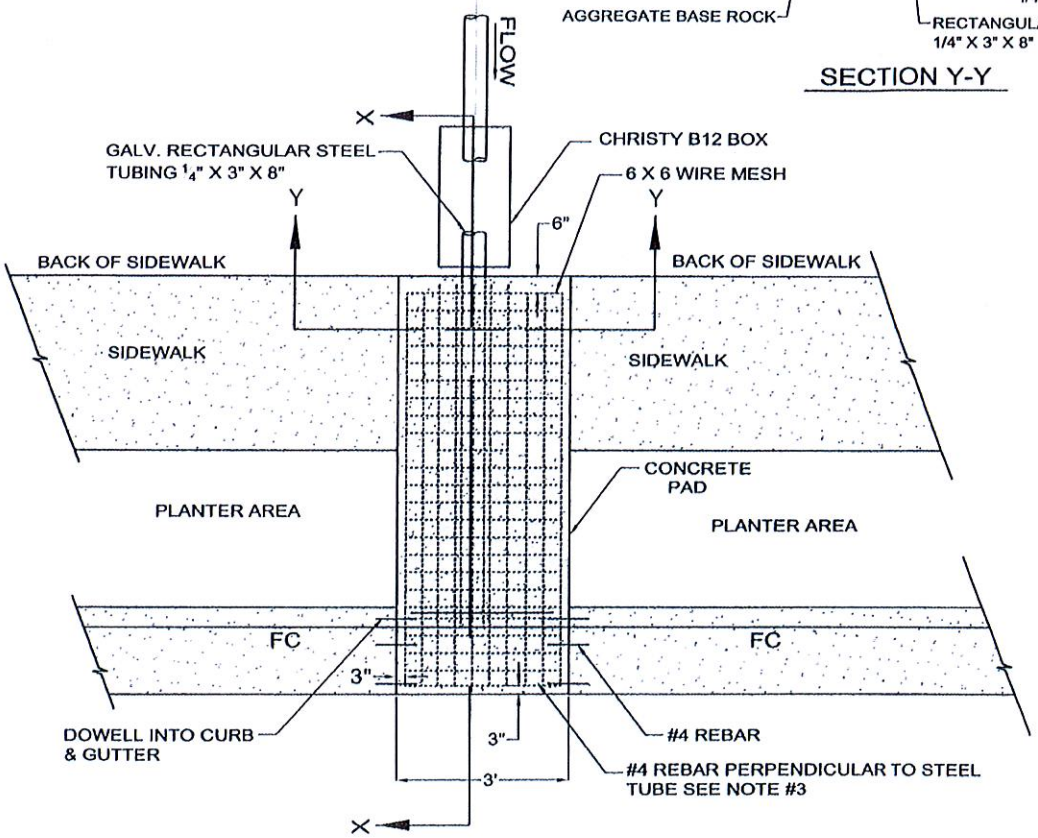


PLAN VIEW

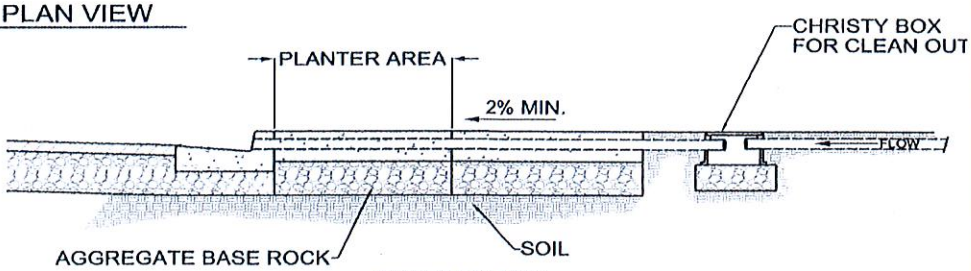


SECTION X-X

NOTES:

1. CURB GUTTER AND SIDEWALK TO BE CONSTRUCTED PER CITY STANDARD PLAN.
2. REBAR SPACING PERPENDICULAR TO PIPE OR TUBING SHALL BE 18" O.C. NO.3 REBAR.
3. 1/4" X 3" X 8" RECTANGULAR STEEL TUBING SHALL BE GALVANIZED STEEL.
4. DRAIN SHALL NOT BE PERMITED IN DRIVEWAY APPROACH AREAS.

TITLE:

# SIDEWALK UNDERDRAIN PIPE

| | | | |
|---|---|---|---|
| DRAWN BY: LOUIE C. GUEVARA | SCALE: NONE | APPROVED: | STANDARD PLAN |
| REVIEWED BY: DAVID RUBCICH | REVISED: APRIL, 2013 | 7-16-13 | D-6 |
| CITY OF HOLLISTER ENGINEERING DEPARTMENT | | CITY ENGINEER: RUDI GOLNIK LIC. NO. 39570 EXP. DATE: 12-31-2013 — DATE | SHEET 1 OF 1 |