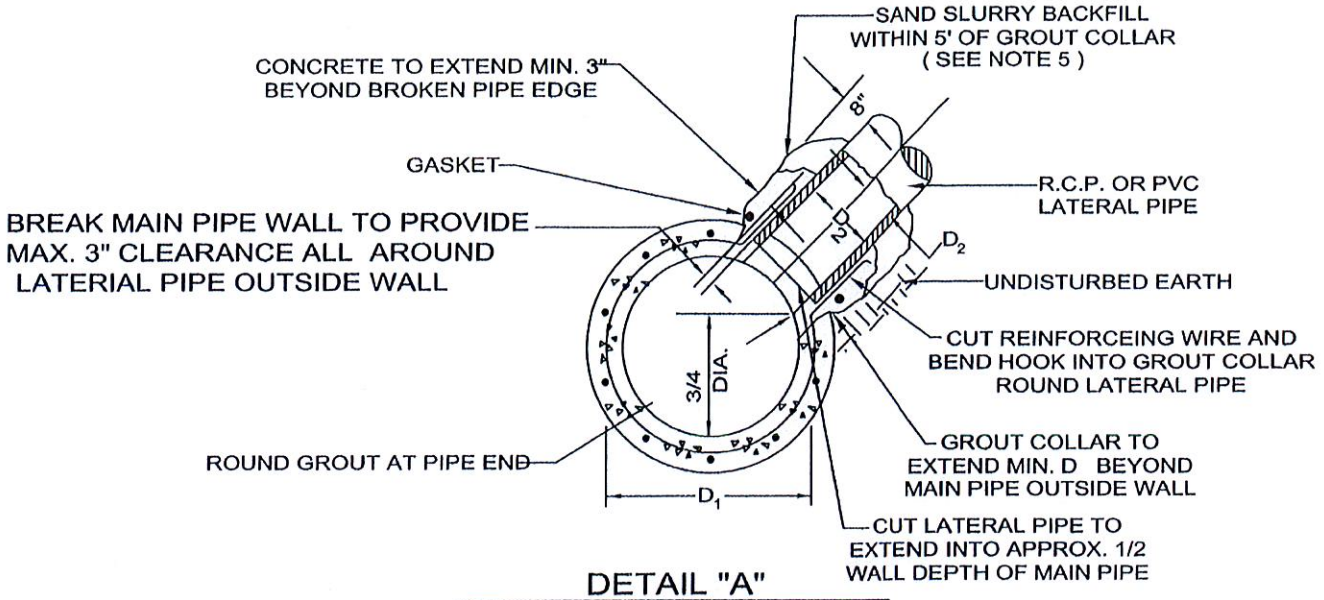

DETAIL "A"
(30" AND LARGER MAIN)

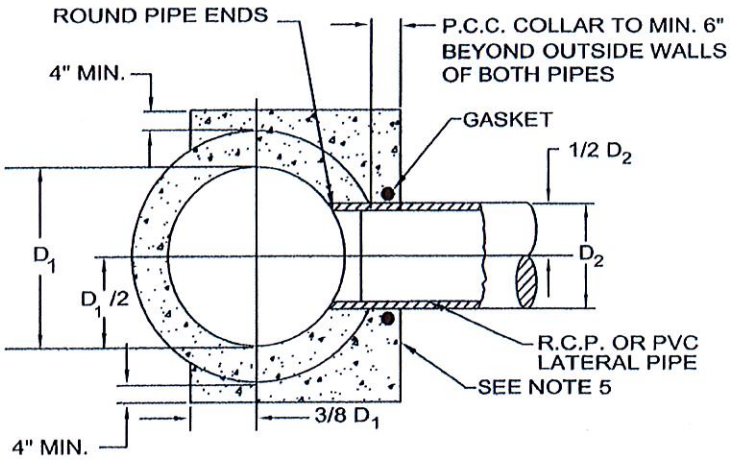

DETAIL "B"
(24" AND 27" MAIN)

NOTES:

1. ALL STORM DRAIN LATERALS SHALL BE HDPE, PVC SDR 26 OR MIN. CLASS III R.C.P.
2. DETAIL "A" SHALL BE USED WHEN LATERAL PIPE D IS LESS THAN 1/2 THE MAIN D .
3. CONCRETE SLURRY BACKFILL SHALL BE CLASS 100-E-100 PCC.
4. DETAIL "B" SHALL BE USED ONLY WHEN LATERAL PIPE D IS GREATER THAN 1/2 MAIN D .
5. CONCRETE COLLAR SHALL BE CLASS 470-C-2000 PCC.
6. NO EDGES OF THE PIPE SHALL NOT PROJECT PIPE FACE.

TITLE:

LATERAL CONNECTION TO STORM MAIN PIPE

DRAWN BY: LOUIE C. GUEVARA	SCALE: NONE	APPROVED:	STANDARD PLAN
REVIEWED BY: DAVID RUBCIC	REVISED: APRIL, 2013	7-16-13	D-4
CITY OF HOLLISTER ENGINEERING DEPARTMENT		CITY ENGINEER: RUDI GOLNIK LIC. NO. 39570 EXP. DATE: 12-31-2013 — DATE	SHEET 1 OF 1