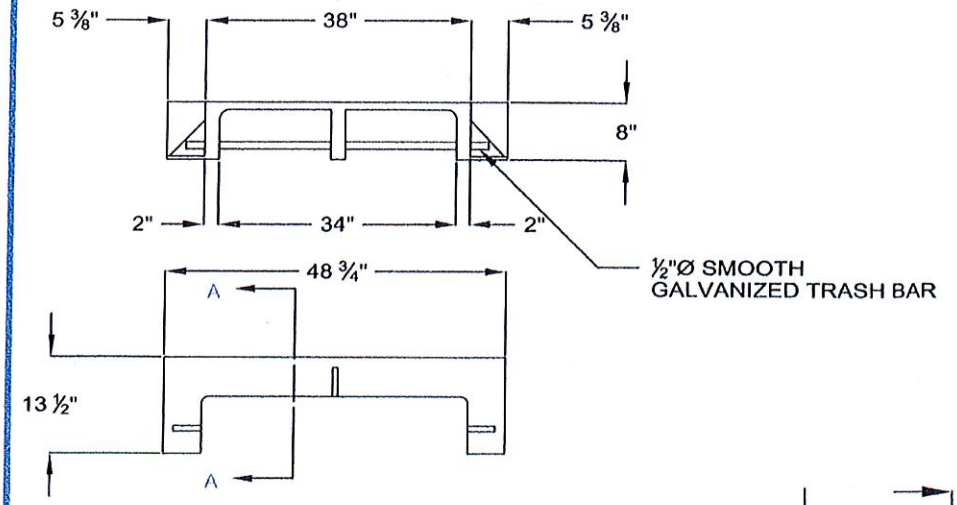

CAST IRON HOOD PLAN VIEW

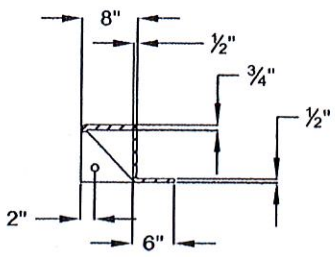

SECTION A-A

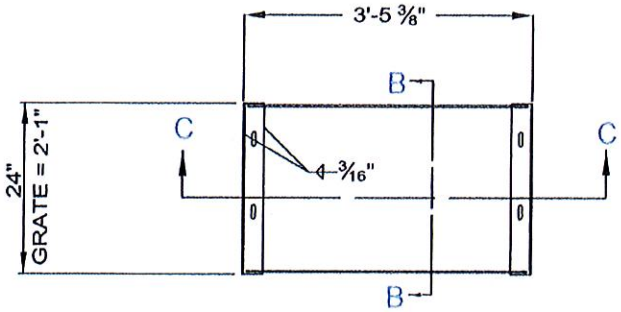

WELDED STEEL FRAME

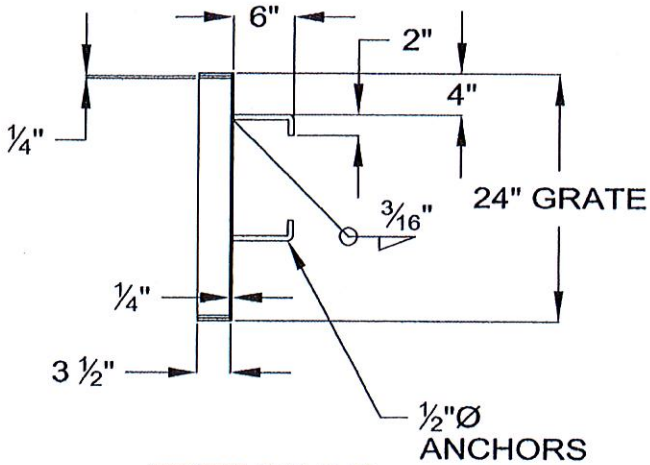

SECTION B-B

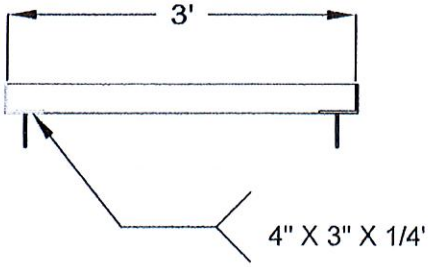

SECTION C-C

NOTES:

1. HOOD SHALL BE CAST IRON SHALL AND RECEIVE AN ASPHALTIC COATING AFTER FABRICATION.
2. FRAME AND GRATES TO BE HOT DIP GALVANIZED AFTER FABRICATION.
3. HOOD SHALL BE PHOENIX IRON WORKS OR APPROVED EQUAL:
   P-6002 CAST IRON FRAME GRATE & HOOD
4. FRAME AND P-6002 CAST IRON HOOD (HOOD ONLY) GRATE TO CONFORM TO TYPE 18-83 AND 24 IOS GRATE PER CALTRANS STANDARD PLAN RSP D77B " BICYCLE TRAVERSABLE GRATE" DIMENSIONS WITH RECTANGULAR FRAME PER CALTRANS STANDARD DETAIL D77A.
   P-6302 24"X36" GALVANIZED STEEL DRAINAGE INLET FRAME AND GRATE
5. SPECIFIED MATERIAL MAY BE SUBSTITUTED WHEN APPROVED BY CITY ENGINEER.

TITLE:

INLET HOOD, FRAME AND GRATES

DRAWN BY: LOUIE C. GUEVARA	SCALE: NONE	APPROVED: 7-16-13	STANDARD PLAN
REVIEWED BY: DAVID RUBCIC	REVISED: APRIL, 2013		D-3-3
CITY OF HOLLISTER ENGINEERING DEPARTMENT		CITY ENGINEER: RUDI GOLNIK LIC. NO. 39570 EXP. DATE: 12-31-2013 — DATE	SHEET 3 OF 4