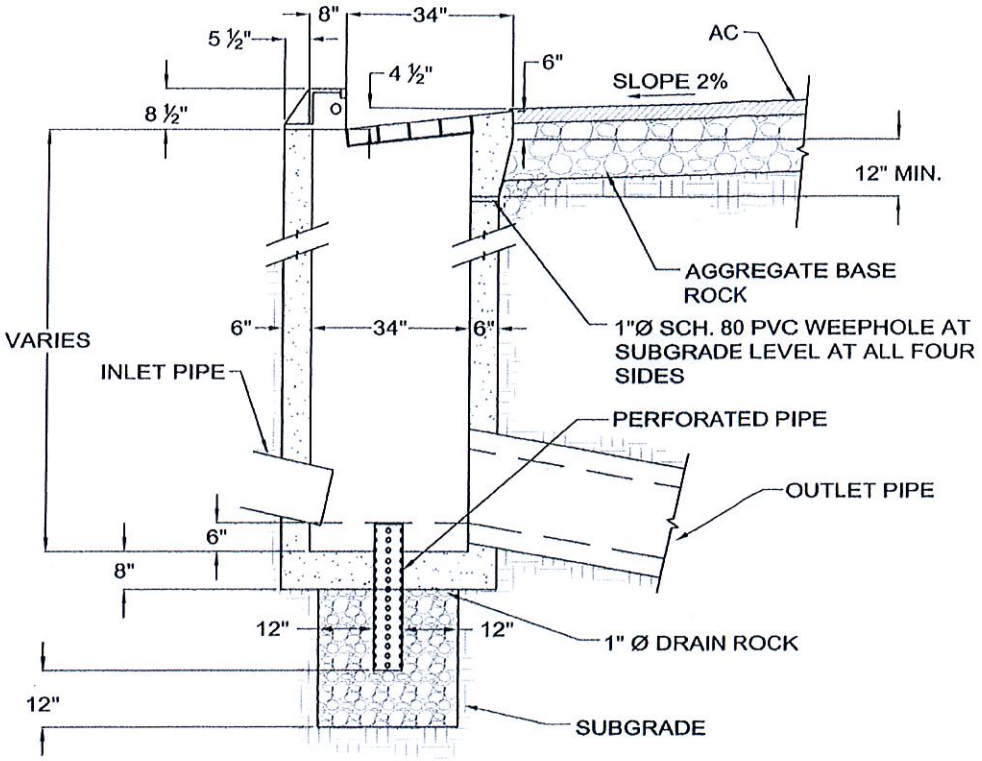

SECTION A-A

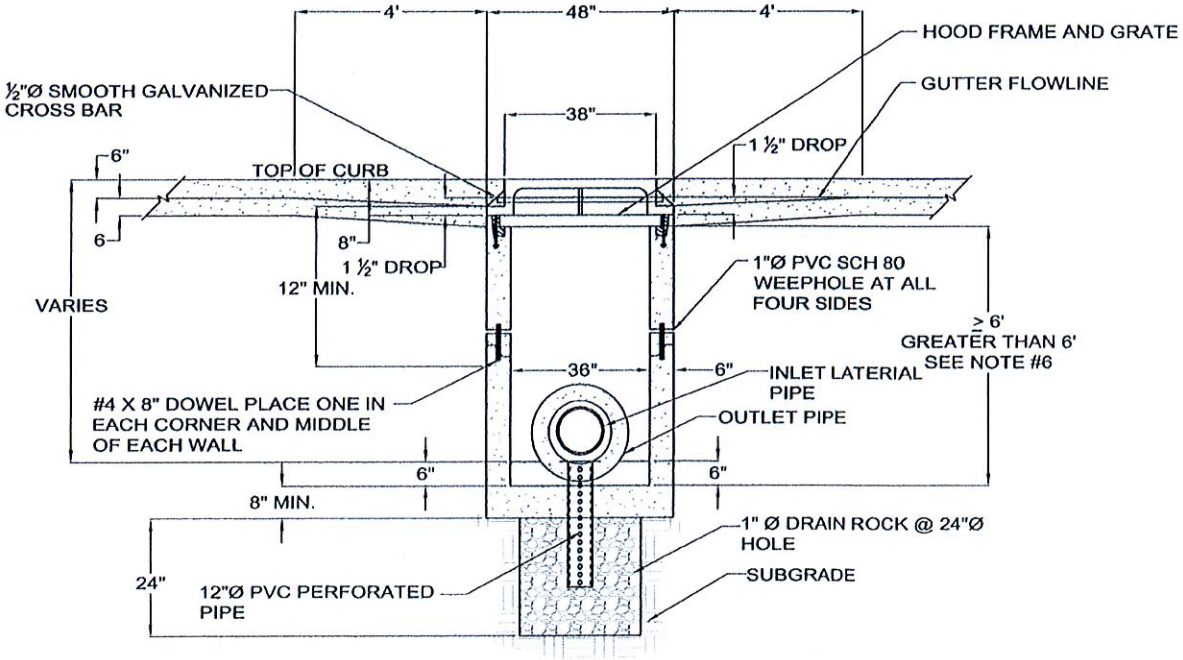

SECTION B-B

TITLE:

CAST-IN-PLACE CURB INLET-SECTIONS

DRAWN BY: LOUIE C. GUEVARA	SCALE: NONE	APPROVED:	STANDARD PLAN
REVIEWED BY: DAVID RUBCIC	REVISED: APRIL, 2013	7-16-13	D-3-2
CITY OF HOLLISTER ENGINEERING DEPARTMENT		CITY ENGINEER: RUDI GOLNIK LIC. NO. 39570 EXP. DATE: 12-31-2013 — DATE	SHEET 2 OF 4