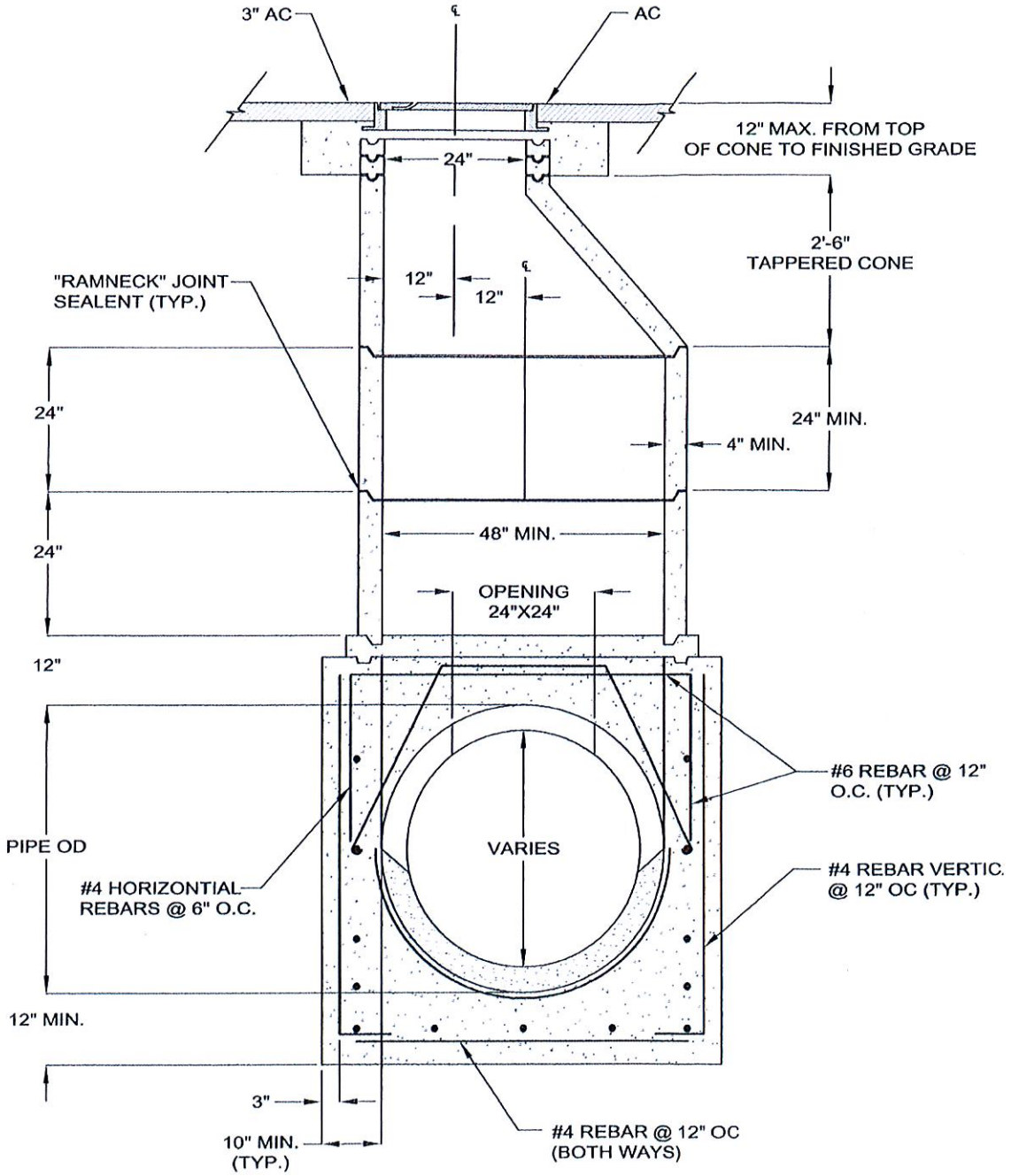

TYPICAL SECTION A-A

NOTES:

1. SHALLOW PIPE COVER CAN USE FLAT TOP WITH CITY ENGINEER APPROVAL.
2. "RAMNECK" OR EQUAL JOINT SEALANT SHALL BE USED AT BARRIER AND CONE SECTIONS.

TITLE:

TYPE III STANDARD MANHOLE (48 INCH AND LARGER)

DRAWN BY: LOUIE C. GUEVARA	SCALE: NONE	APPROVED:	STANDARD PLAN
REVIEWED BY: DAVID RUBCIC	REVISED: APRIL, 2013	7-16-13	D-2-2
CITY OF HOLLISTER ENGINEERING DEPARTMENT		CITY ENGINEER: RUDI GOLNIK LIC. NO. 39570 EXP. DATE: 12-31-2013 — DATE	SHEET 2 OF 2