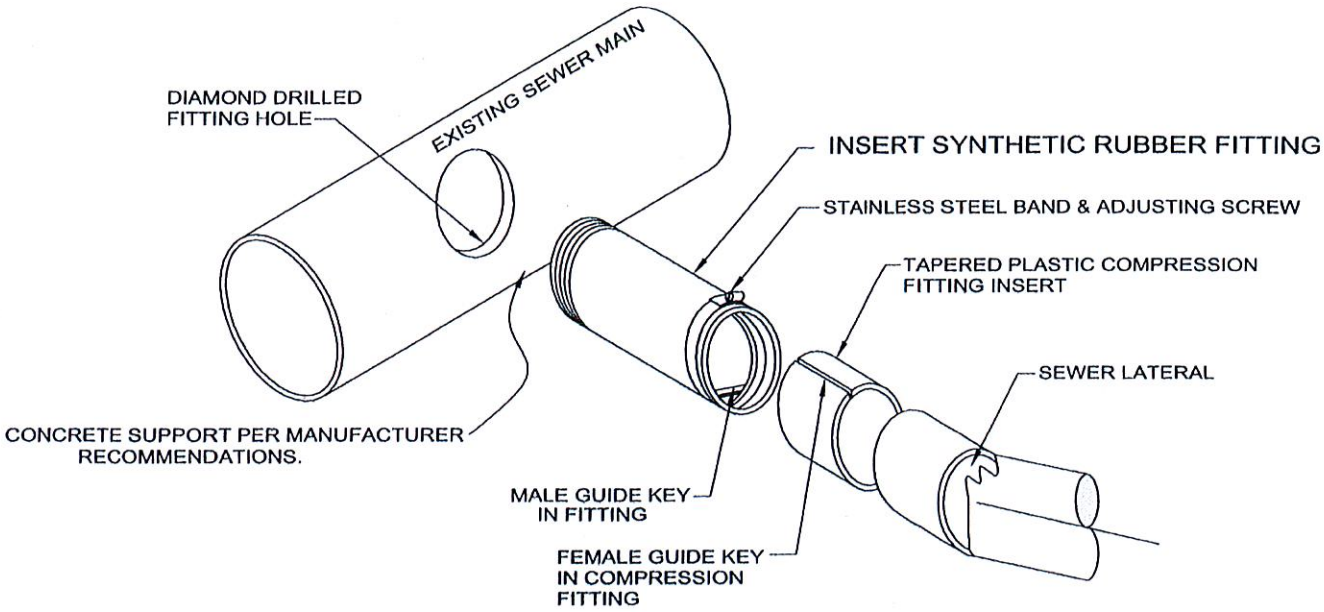

SYNTHETIC RUBBER WEDGED INSERT TEE TAP TITE (VCP)

(MIN. DIFFERENTIAL OF TWO SIZES REQUIRED)

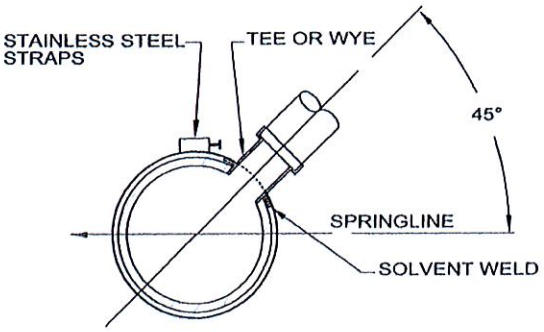

TEE OR WYE (PVC OR ABS)

(SOLVENT WELDED FITTINGS)

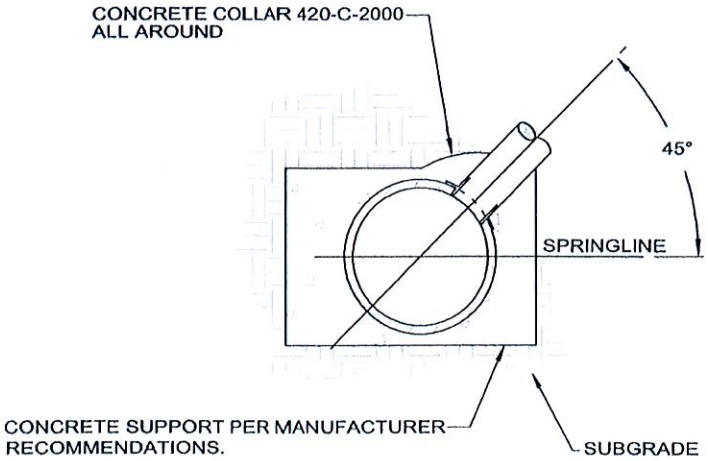

SEWER MAIN TAP

TITLE:

SEWER LATERAL TAPPING TO EXISTING VCP SEWER MAINS

DRAWN BY: LOUIE C. GUEVARA	SCALE: NONE	APPROVED:	STANDARD PLAN
REVIEWED BY: DAVID RUBCIC	REVISED: APRIL, 2013	7-16-13	C-3
CITY OF HOLLISTER ENGINEERING DEPARTMENT		CITY ENGINEER: RUDI GOLNIK LIC. NO. 39570 EXP. DATE: 12-31-2013 — DATE	SHEET 1 OF 1