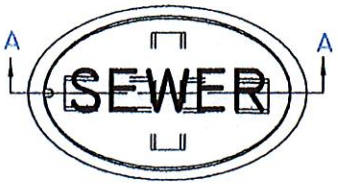

COVER AND FRAME

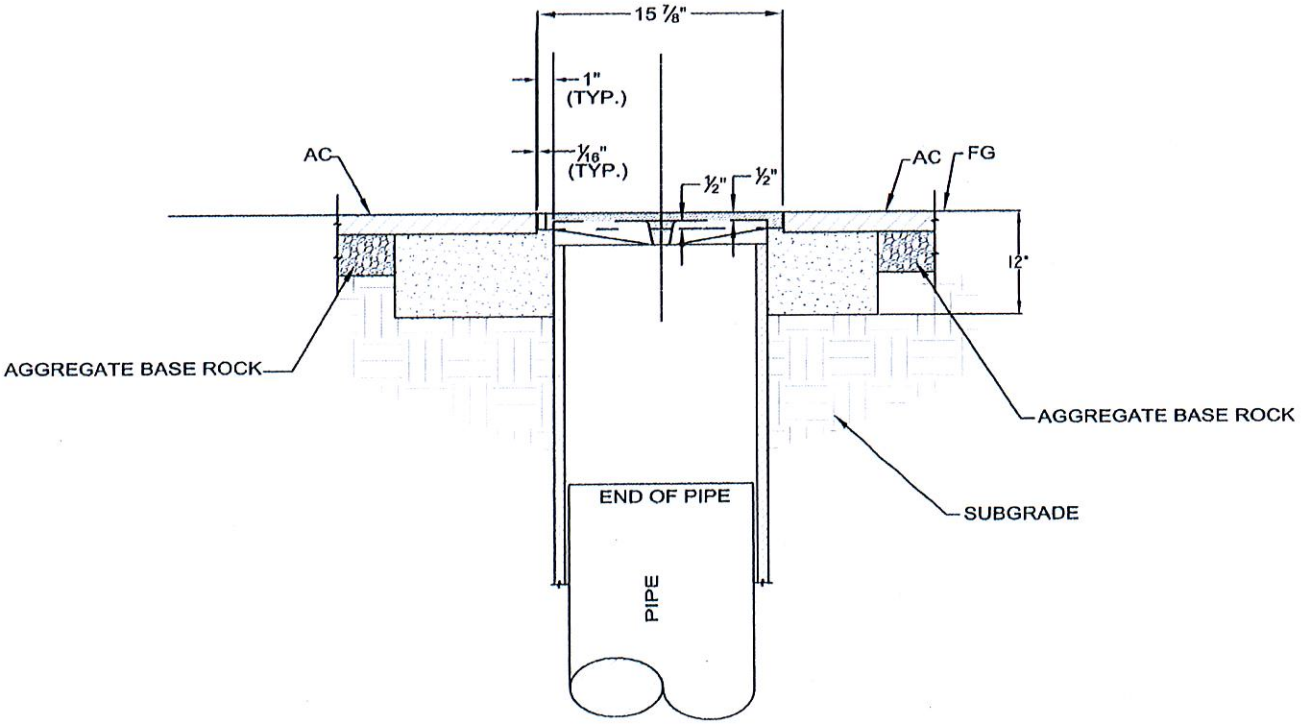

SECTION A-A

RISER FRAME COVER & COLLAR

TITLE: SEWER CLEANOUT FRAME/COVER & CONCRETE COLLAR

DRAWN BY: LOUIE C. GUEVARA	SCALE: NONE	APPROVED:	STANDARD PLAN
REVIEWED BY: DAVID RUBCIC	REVISED: APRIL, 2013	7-16-13	C-2-2
CITY OF HOLLISTER ENGINEERING DEPARTMENT		CITY ENGINEER: RUDI GOLNIK LIC. NO. 39570 EXP. DATE: 12-31-2013 DATE	SHEET 2 OF 2