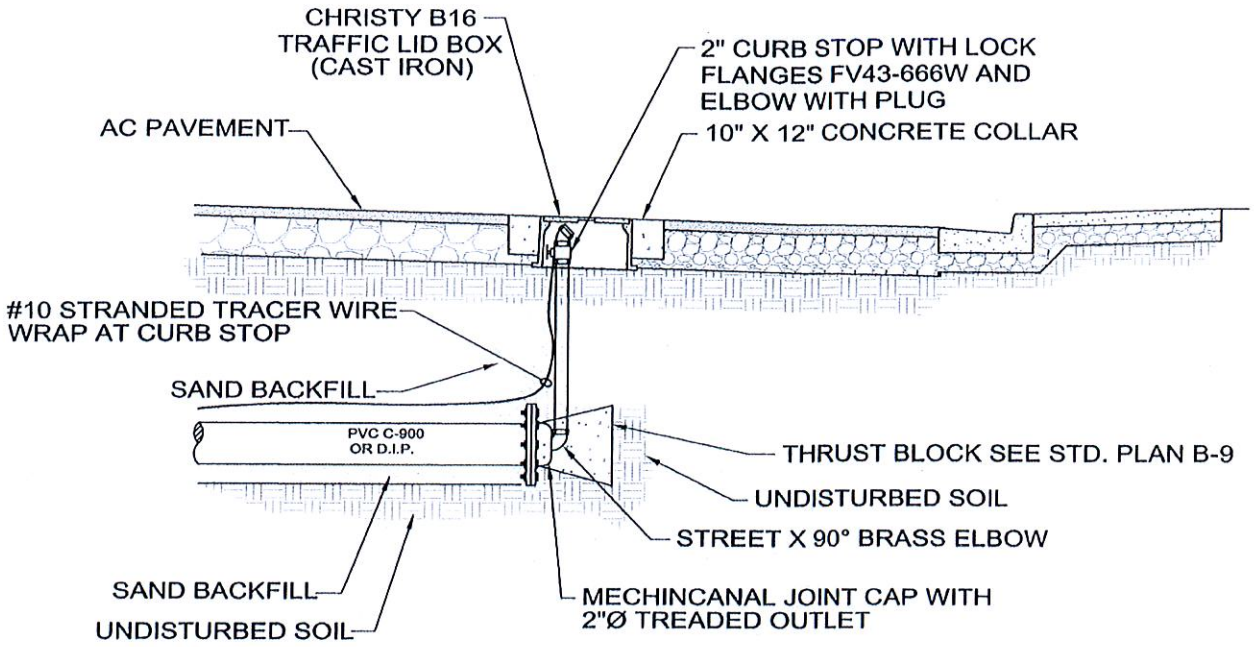

FOR 8" DIA. AND SMALLER WATER MAIN

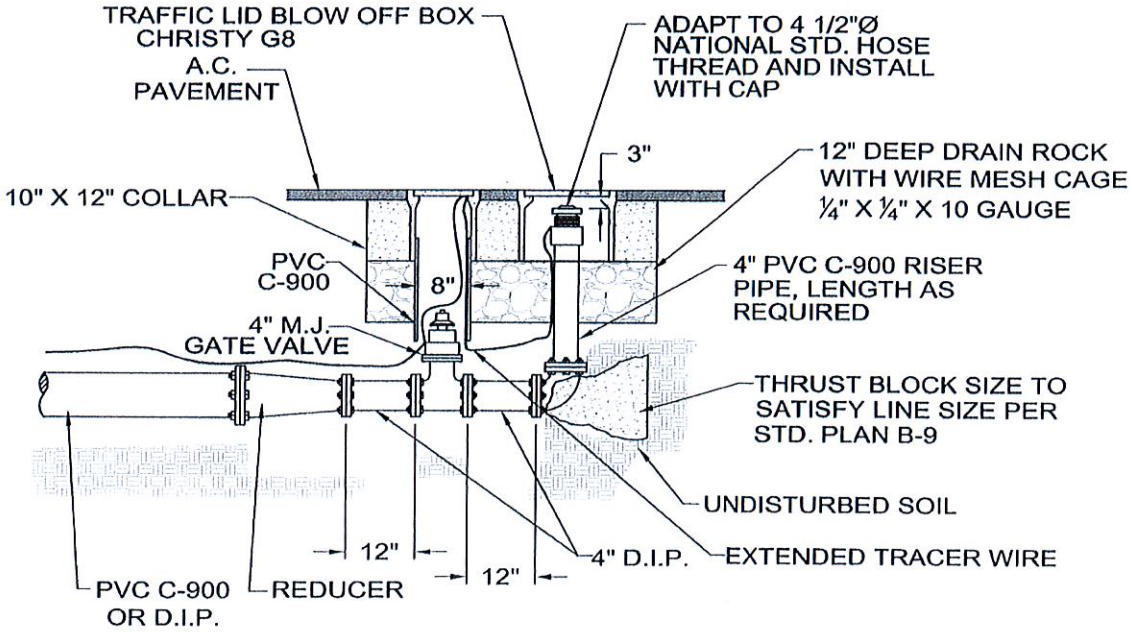

FOR 10" DIA. AND LARGER WATER MAIN

TITLE:

BLOW OFF ASSEMBLY

DRAWN BY: LOUIE C. GUEVARA	SCALE: NONE	APPROVED: 7-16-13	STANDARD PLAN
REVIEWED BY: DAVID RUBCIC	REVISED: APRIL, 2013		B-8
CITY OF HOLLISTER ENGINEERING DEPARTMENT		CITY ENGINEER: RUDI GOLNIK LIC. NO. 39570 EXP. DATE: 12-31-2013 — DATE	SHEET 1 OF 1