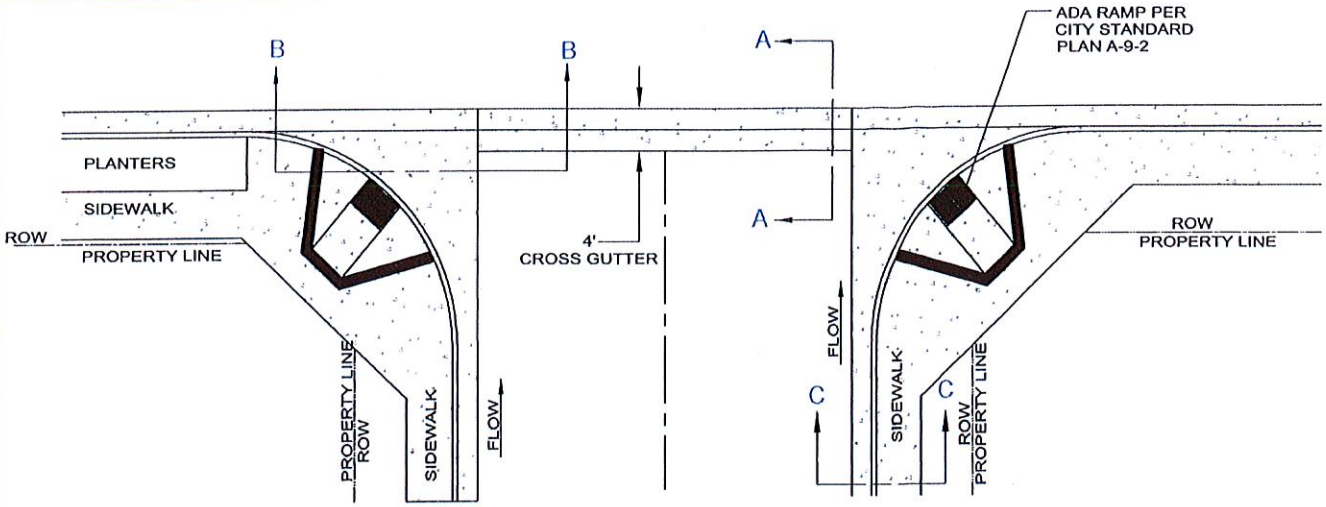

TYPICAL CROSS GUTTER DETAIL

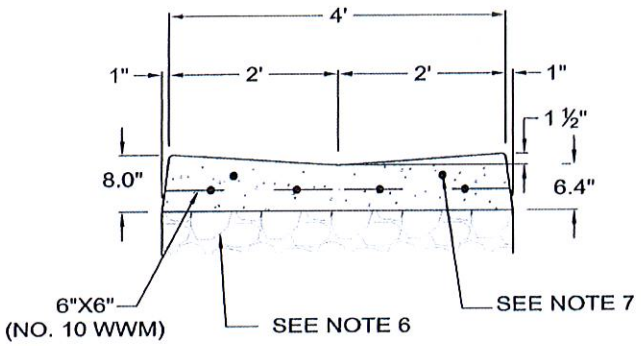

SECTION A-A

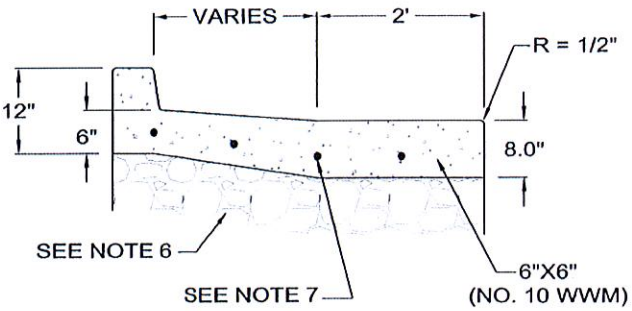

SECTION B-B

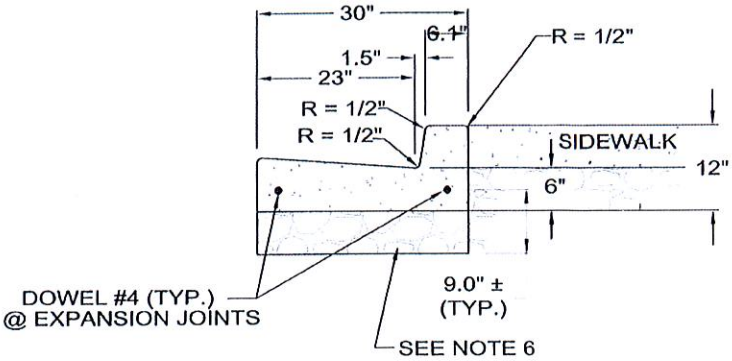

SECTION C-C

TITLE:

CURBS AND CROSS GUTTERS

DRAWN BY: LOUIE C. GUEVARA	SCALE: NONE	APPROVED:	STANDARD PLAN
REVIEWED BY: DAVID RUBCIC	REVISED: APRIL, 2013	7-16-13	A-8-1
CITY OF HOLLISTER ENGINEERING DEPARTMENT		CITY ENGINEER: RUDI GOLNIK LIC. NO. 39570 EXP. DATE: 12-31-2013 — DATE	SHEET 1 OF 2