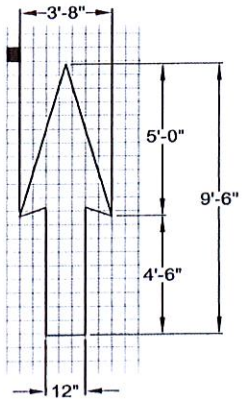


STRAIGHT ARROW

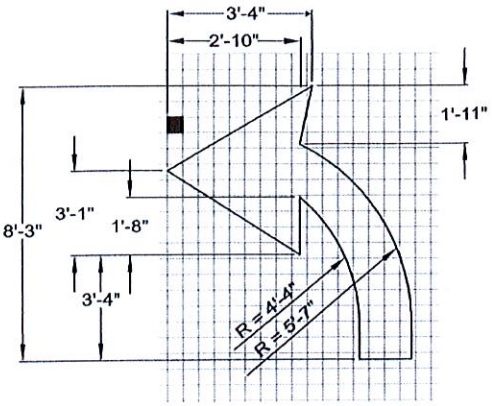


LEFT/RIGHT TURN ARROW

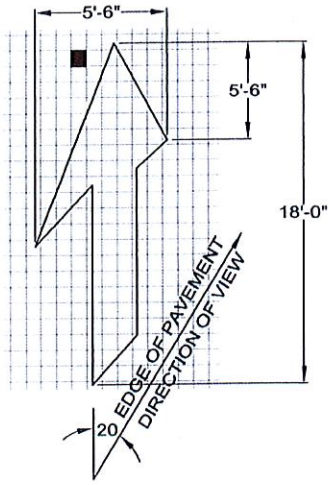


RIGHT LANE MERGE ARROW

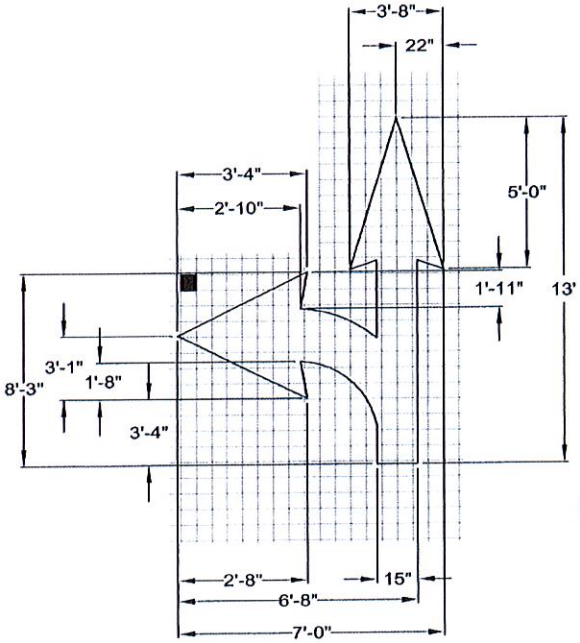


RIGHT LANE MERGE ARROW

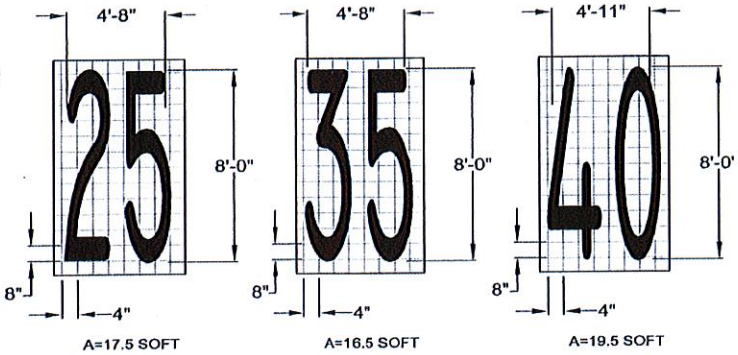


NUMERALS

NOTES:

1. LOCATION & PLACEMENT OF CONTROL POINTS & PRELIMINARY MARKINGS ARE SUBJECT TO APPROVAL BY CITY ENGINEER.
2. MINOR VARIATIONS IN DIMENSIONS ARE SUBJECT TO APPROVAL BY CITY ENGINEER.
3. SEE CITY STANDARD PLAN NO. A-14-2 FOR PAVEMENT MARKING LEGENDS AND WORDS.
4. LEGENDS SHALL BE IN ACCORDANCE WITH MUTCD.

TITLE:

# PAVEMENT MARKINGS ARROWS AND NUMERALS (STANDARD VERSION)

| | | | |
|---|---|---|---|
| DRAWN BY: LOUIE C. GUEVARA | SCALE: NONE | APPROVED: | STANDARD PLAN |
| REVIEWED BY: DAVID RUBCIC | REVISED: APRIL, 2013 | 7-16-13 | A-14-3 |
| CITY OF HOLLISTER ENGINEERING DEPARTMENT | | CITY ENGINEER: RUDI GOLNIK LIC. NO. 39570 EXP. DATE: 12-31-2013 — DATE | SHEET 3 OF 3 |